RECTRON
SEMICONDUCTOR
TECHNICAL SPECIFICATION

W005M THRU W10M

SINGLE-PHASE GLASS PASSIVATED SILICON BRIDGE RECTIFIER

VOLTAGE RANGE 50 to 1000 Volts CURRENT 1.5 Amperes

FEATURES

* High reverse voltage to 1000V
* Surge overload ratings to 50 amperes peak
* Good for printed circuit board assembly
* Mounting position: Any
* Weight: 1.20 grams

MECHANICAL DATA

* UL listed the recognized component directory, file #E94233
* Epoxy: Device has UL flammability classification 94V-O

WOM

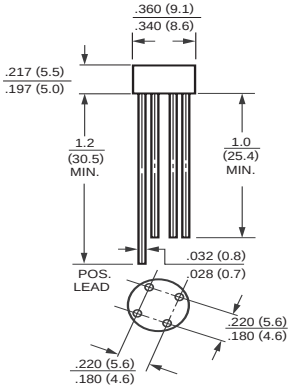

Dimensions in inches and (millimeters)

MAXIMUM RATINGS AND ELECTRICAL CHARACTERISTICS

Ratings at 25 °C ambient temperature unless otherwise specified.
Single phase, half wave, 60 Hz, resistive or inductive load.
For capacitive load, derate current by 20%.

MAXIMUM RATINGS (At T_A = 25°C unless otherwise noted)

RATINGS	SYMBOL	W005M	W01M	W02M	W04M	W06M	W08M	W10M	UNITS
Maximum Recurrent Peak Reverse Voltage	V_{RRM}	50	100	200	400	600	800	1000	Volts
Maximum RMS Bridge Input Voltage	V_{RMS}	35	70	140	280	420	560	700	Volts
Maximum DC Blocking Voltage	V_{DC}	50	100	200	400	600	800	1000	Volts
Maximum Average Forward Rectified Output Current at T_A = 25°C	I_O	1.5							Amps
Peak Forward Surge Current 8.3 ms single half sine-wave superimposed on rated load (JEDEC method)	I_{FSM}	50							Amps
Operating Temperature Range	T_J	-55 to + 125							°C
Storage Temperature Range	T_{STG}	-55 to + 150							°C

ELECTRICAL CHARACTERISTICS (At T_A = 25°C unless otherwise noted)

CHARACTERISTICS		SYMBOL	W005M	W01M	W02M	W04M	W06M	W08M	W10M	UNITS
Maximum Forward Voltage Drop per element at 1.0A DC		V_F	1.0							Volts
Maximum Reverse Current at Rated	@T_A = 25°C	I_R	10							uAmps
DC Blocking Voltage per element	@T_A = 100°C		1							mAmps

2001-5

RATING AND CHARACTERISTIC CURVES (W005M THRU W10M)

FIG. 1 - MAXIMUM NON-REPETITIVE FORWARD SURGE CURRENT

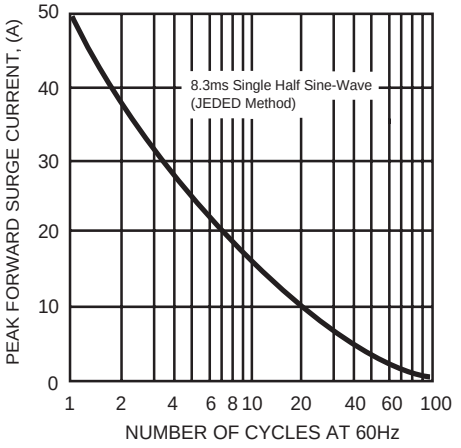

FIG. 2 - TYPICAL FORWARD CURRENT DERATING CURVE

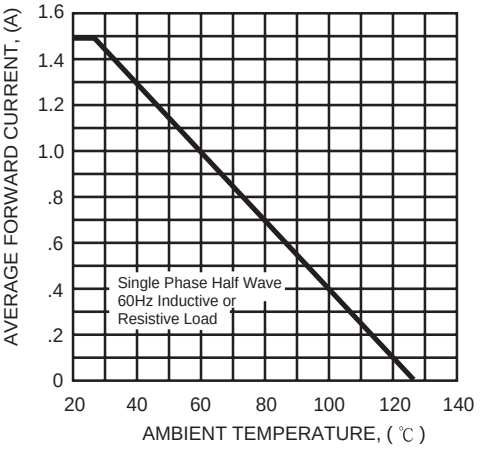

FIG. 3 - TYPICAL INSTANTANEOUS FORWARD CHARACTERISTICS

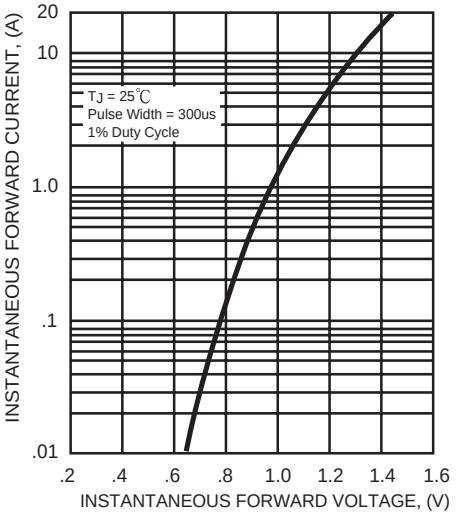
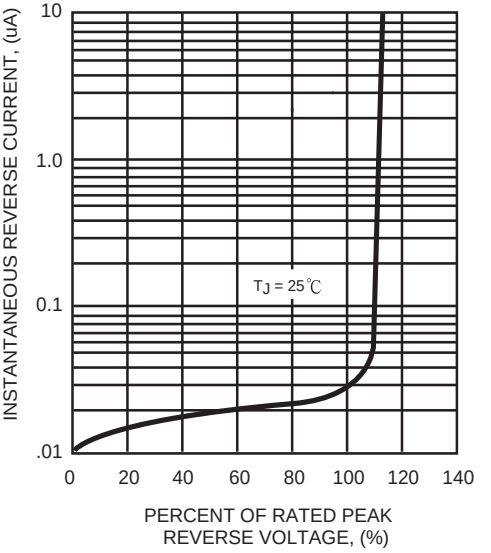
FIG. 4 - TYPICAL REVERSE CHARACTERISTICS