PRODUCT DATASHEET
Tina3 series
last update 25/5/2012

Ordering number **FA11905_TINA3-S**

Family	Tina3	FWHM	23 degrees
Type	Assembly	Efficiency	86 %
LED	XM-L	cd/lm	3.440
Color	White	Gerber File	Available
Diameter	16.1 mm		
Height	11.5 mm		
Style	Round		
Optic Material	PMMA		
Holder Material	PC		
Fastening	Pin, tape		
Status	Ready		

NOTE: The typical divergence will be changed by different color, chip size and chip position tolerance. The typical total divergence is the full angle measured where the luminous intensity is half of the peak value.

Ledil Oy
Salorankatu 10
24240 SALO
Finland

http://www.ledil.com
email: ledil@ledil.com
FAX: +358-2-733 8001

GENERAL INFORMATION

- Product series especially designed & optimized for XM-L series of LEDs.
- Special care taken to make light distribution as uniform as possible.
- Lens material optical grade PMMA with high UV and temperature resistance (105 degrees of Celcius / 220 degrees of Fahrenheit). Allows use of high current and temperature conditions.

Please find more information about used material from below:
http://ledil.fi/sites/default/files/Documents/Technical/Material/PMMA%208N%20UL94_Yellow%20Card.pdf
http://ledil.fi/sites/default/files/Documents/Technical/Material/PMMA%208N%20PLEXIGLAS-Datasheet.pdf
- Optic holder molded by high quality PC material (120 dergees of Celcius / 248 degrees of Fahrenheit).

- Fastening to heat sink with a PU foam adhesive tape of automotive grade. Please find fastening details by clicking link: http://www.ledil.com/datasheets/DataSheet_TAPE.pdf

NOTE 1: We advise customer to ensure the suitability and sufficiency of the bond in the end product. For example, mechanical stress, vibration and holes on the surface of the circuit boar weaken the strength of the tape.

NOTE 2: Assembly to the surface must be made straight, so the tape bonds constant and balanced with fastening surface. Slanted assembly might cause unbalanced bond to the surface. All surfaces where tape is applied must be clean, dry and free from grease and dirt.

If cleaning of PCB surfaces is needed, please follow strictly the cleaning instructions of your LED manufacturer - this is important as cleaning shall under no circumstances damage LEDs or other electronics components on the PCB.

Further note that optical components shall not be cleaned with any chemicals - only micro fiber cloth may be used to remove fingerprints or other traces from handling.

Ledil Oy
Salorankatu 10
24240 SALO
Finland

http://www.ledil.com
email: ledil@ledil.com
FAX: +358-2-733 8001

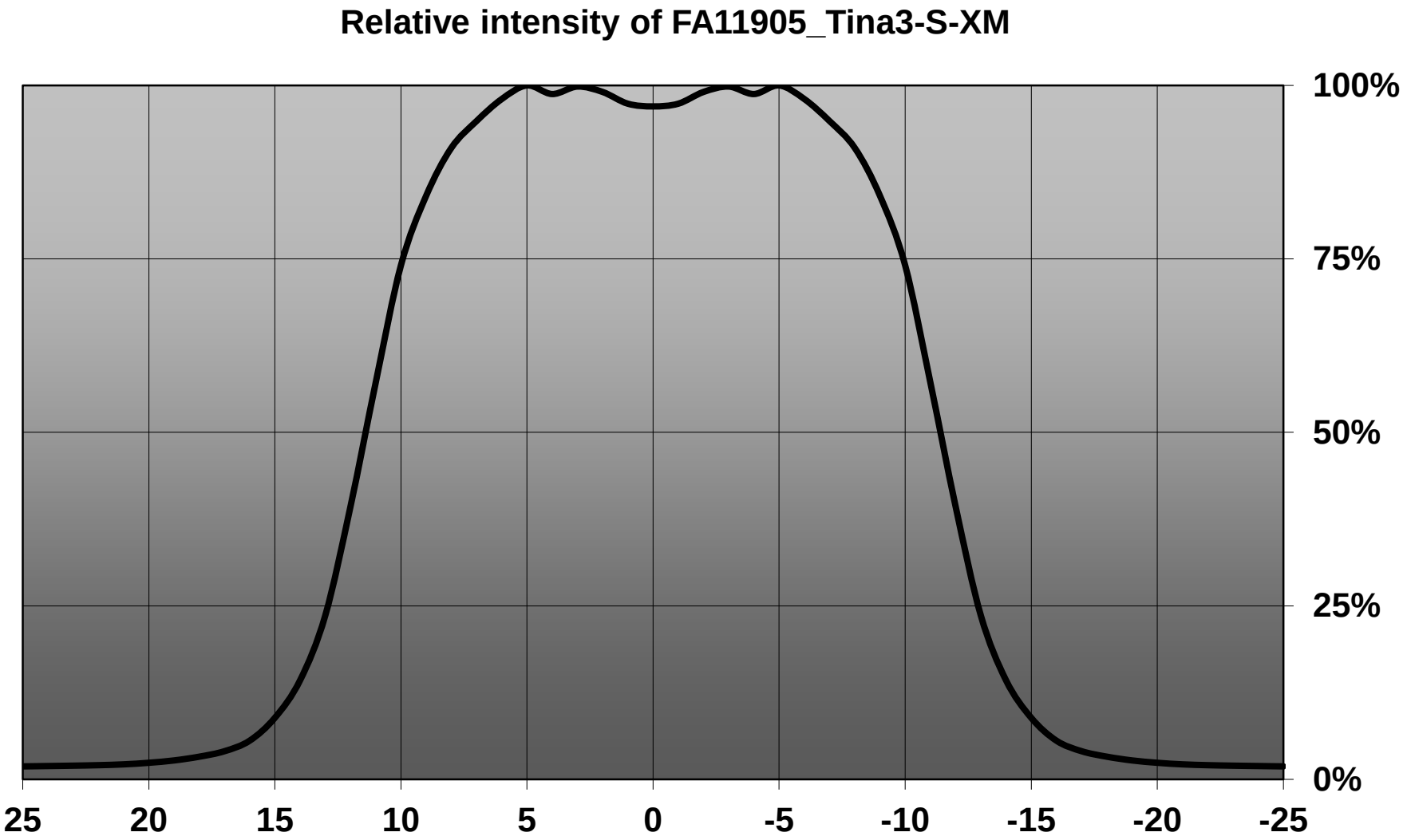
Relative intensity of FA11905_Tina3-S-XM
100%
75%
50%
25%
0%
25
20
15
10
5
0
-5
-10
-15
-20
-25

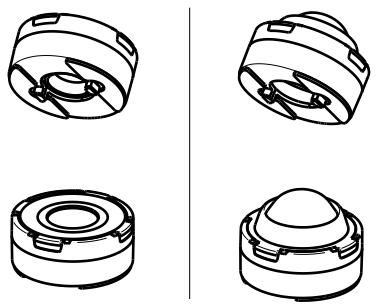

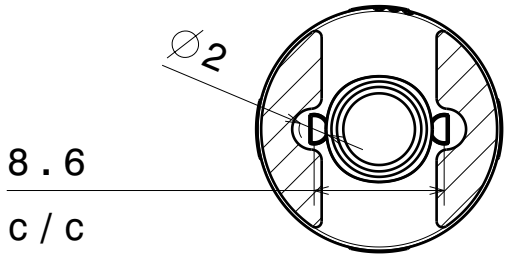

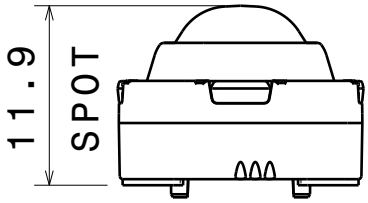

FA11905

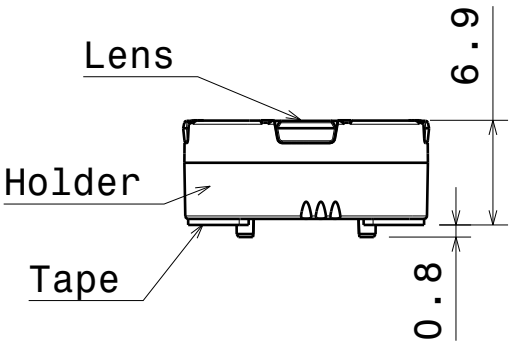

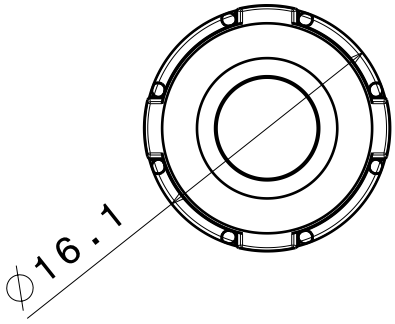

MATERIALS
Lens: PMMA
Holder: PC
Tape: PU Foam

Part no.s:
FA11824_Tina3-W-XP
FA11825_Tina3-WW-XP
FA11826_Tina3-WWW-XP
FA11905_Tina3-S-XP
FA11870_Tina3-OO-XP

This drawing is our property.
It can't be reproduced
or communicated without
our written agreement.

LEDIL

DRAWN BY p	DATE 18.10.2010	DRAWING TITLE Datasheet Tina3-series Assy XP			
CHECKED BY h h	DATE 14.10.2010	SIZE A4	DRAWING NUMBER -		REV 1
DESIGNED BY pv	DATE 13.10.2010	SCALE 2:1	WEIGHT(g) -		SHEET 1/1