1.10mm Height 1206 Package

Pink Chip LED

Technical Data Sheet

Features:

- ◇ Package in 8mm tape on 7” diameter reel.
- ◇ Compatible with automatic placement equipment.
- ◇ Compatible with infrared and vapor phase-reflow solder process.
- ◇ Mono-color type.
- ◇ The product itself will remain within RoHS compliant Version.

Descriptions:

- ◇ The S150 SMD LED is much smaller than lead frame type components, thus enable smaller board size, higher packing density, reduced storage space and finally smaller equipment to be obtained.
- ◇ Besides, lightweight makes them ideal for miniature applications, etc.

Applications:

- ◇ Automotive: Backlighting in dashboard and switch.
- ◇ Telecommunication: Indicator and backlighting in telephone and fax.
- ◇ Flat backlight for LCD, switch and symbol.
- ◇ General use.

Package Dimension:

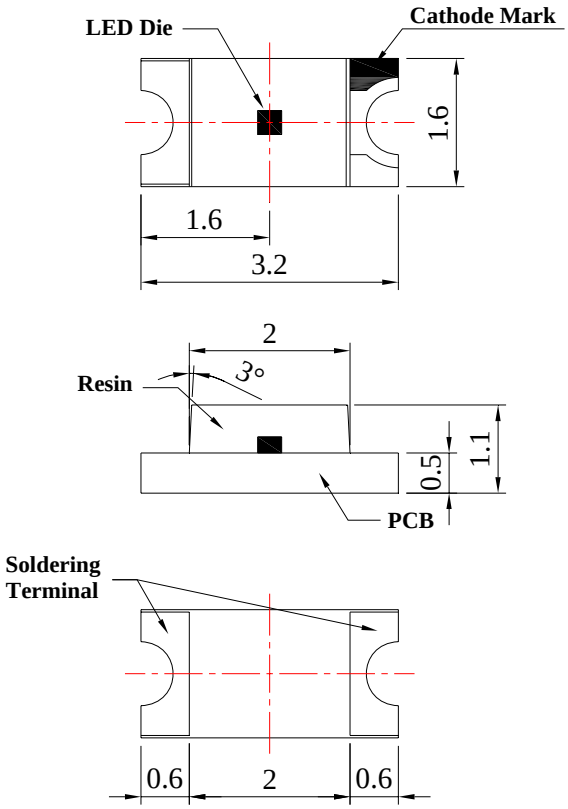

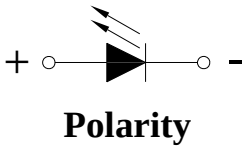

Recommended Soldering Pad Dimensions

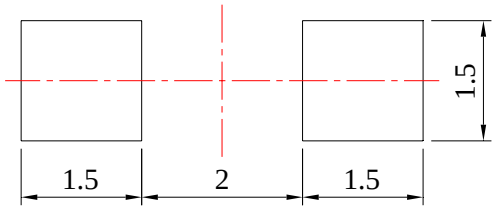

Unit: mm
Tolerance: ±0.10mm

1. Soldering terminal may shift in x, y direction.
2. Polarity referring onto the cathode mark is reversed on the UR/HR/SR.

Part No.	Chip Material	Lens Color	Source Color
S150PINK1206	InGaN	Pink	Pink

Notes:

1. All dimensions are in millimeters (inches).
2. Tolerance is ± 0.10 mm (.004”) unless otherwise specified.
3. Specifications are subject to change without notice.

Absolute Maximum Ratings at Ta=25℃

Parameters	Symbol	Max	Unit
Power Dissipation	PD	95	mW
Peak Forward Current (1/10 Duty Cycle, 0.1ms Pulse Width)	IFP	100	mA
Forward Current	IF	25	mA
Reverse Voltage	V_R	5	V
Electrostatic Discharge (HBM)	ESD	400	V
Operating Temperature Range	Topr	-40℃ to +80℃	
Storage Temperature Range	Tstg	-40℃ to +85℃	
Soldering Temperature	Tsld	Reflow Soldering: 260℃ for 5 Seconds Hand Soldering: 350℃ for 3 Seconds	

Electrical Optical Characteristics at Ta=25℃

Parameters	Symbol	Min.	Typ.	Max.	Unit	Test Condition
Luminous Intensity *	IV	200	250	350	mcd	IF=20mA (Note 1)
Viewing Angle *	2θ1/2	---	140	---	Deg	IF=20mA (Note 2)
Chromaticity Coordinates	X	---	0.46	---		IF=20mA (Note 3)
	Y	---	0.24	---		
Forward Voltage	VF	2.80	3.40	3.80	V	IF=20mA
Reverse Current	IR	---	---	10	μA	V_R=5V

Notes:

1. Luminous Intensity Measurement allowance is ± 10%.
2. $\theta_{1/2}$ is the off-axis angle at which the luminous intensity is half the axial luminous intensity.
3. It use many parameters that correspond to the CIE 1931 2°. X, Y, and Z are CIE 1931 2° values of Red, Green and Blue content of the measurement.

CIE Chromaticity Diagram:

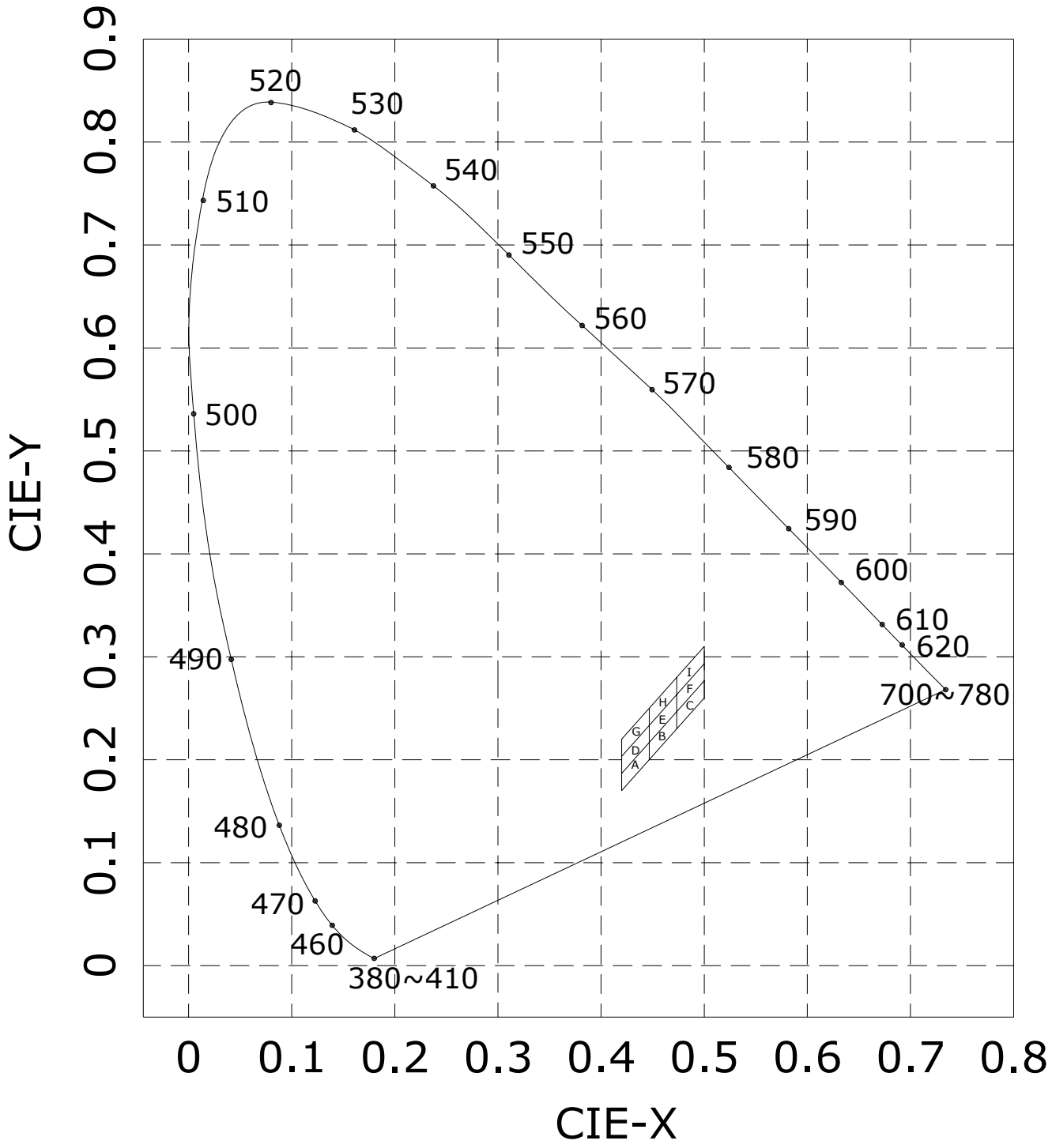

Chromaticity Coordinates Specifications for Bin Rank

(IF=20mA, Ta=25℃)

Color	Group	Chromaticity Coordinate Group				
Pink	Full	X	0.4200	0.4200	0.5000	0.5000
		Y	0.1700	0.2200	0.2600	0.3100
	A	X	0.4200	0.4200	0.4467	0.4467
		Y	0.1700	0.1867	0.2000	0.2167
	B	X	0.4467	0.4467	0.4733	0.4733
		Y	0.2000	0.2167	0.2300	0.2467
	C	X	0.4733	0.4733	0.5000	0.5000
		Y	0.2300	0.2467	0.2600	0.2767
	D	X	0.4200	0.4200	0.4467	0.4467
		Y	0.1867	0.2033	0.2167	0.2333
	E	X	0.4467	0.4467	0.4733	0.4733
		Y	0.2167	0.2333	0.2467	0.2633
	F	X	0.4733	0.4733	0.5000	0.5000
		Y	0.2467	0.2633	0.2767	0.2933
	G	X	0.4200	0.4200	0.4467	0.4467
		Y	0.2033	0.2200	0.2333	0.2500
	H	X	0.4467	0.4467	0.4733	0.4733
		Y	0.2333	0.2500	0.2633	0.2800
	I	X	0.4733	0.4733	0.5000	0.5000
		Y	0.2633	0.2800	0.2933	0.3100

Notes:

1. Color coordinates measurement allowance is ± 0.01.
2. One delivery will include up to two consecutive color ranks and three luminous intensity ranks of the products the quantity-ratio of the ranks is decided by ***Luckylight***.

Typical Electrical / Optical Characteristics Curves
(25℃ Ambient Temperature Unless Otherwise Noted)

Spectrum Distribution

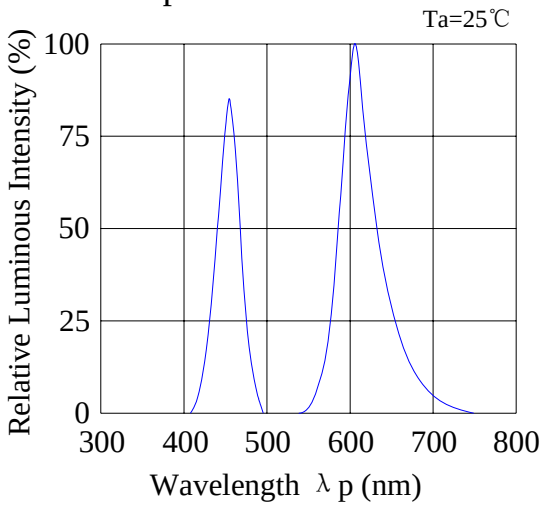

Forward Current & Forward Voltage

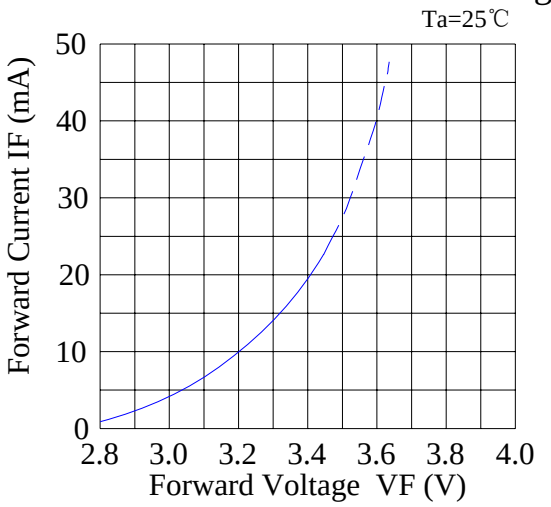

Luminous Intensity & Ambient Temperature

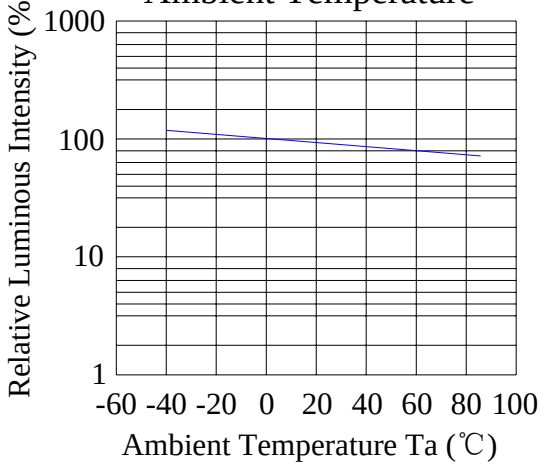

Luminous Intensity & Forward Current

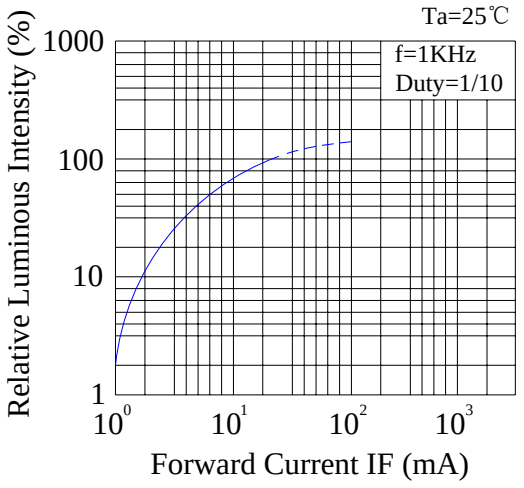

Forward Current Derating Curve

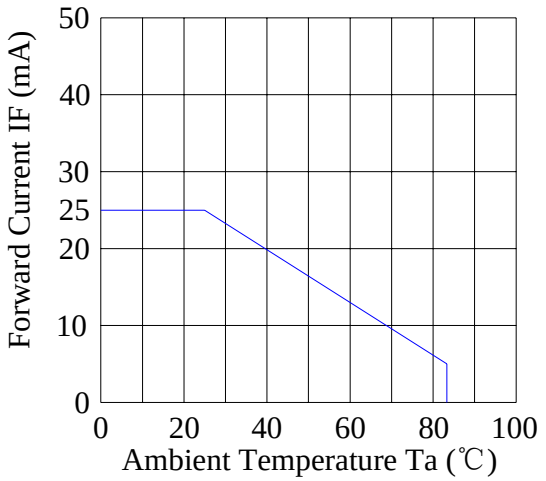

Radiation Diagram

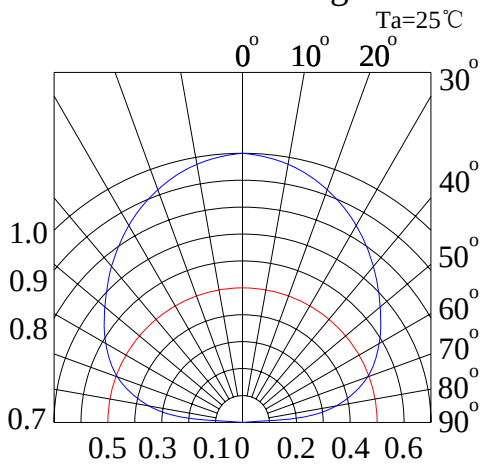

Reel Dimensions:

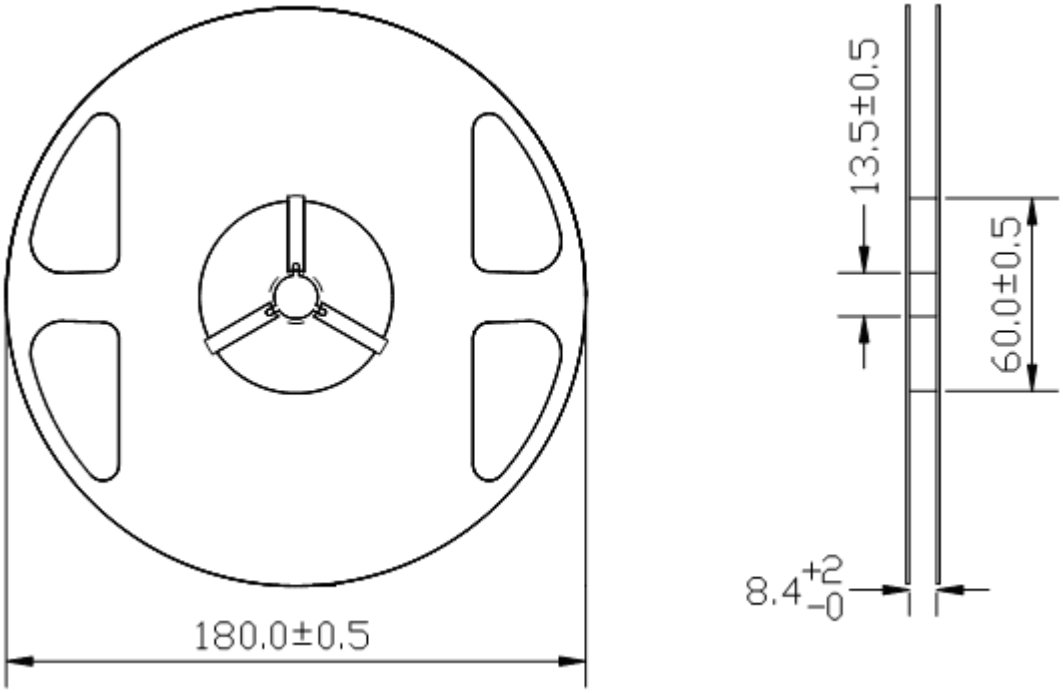

Carrier Tape Dimensions:

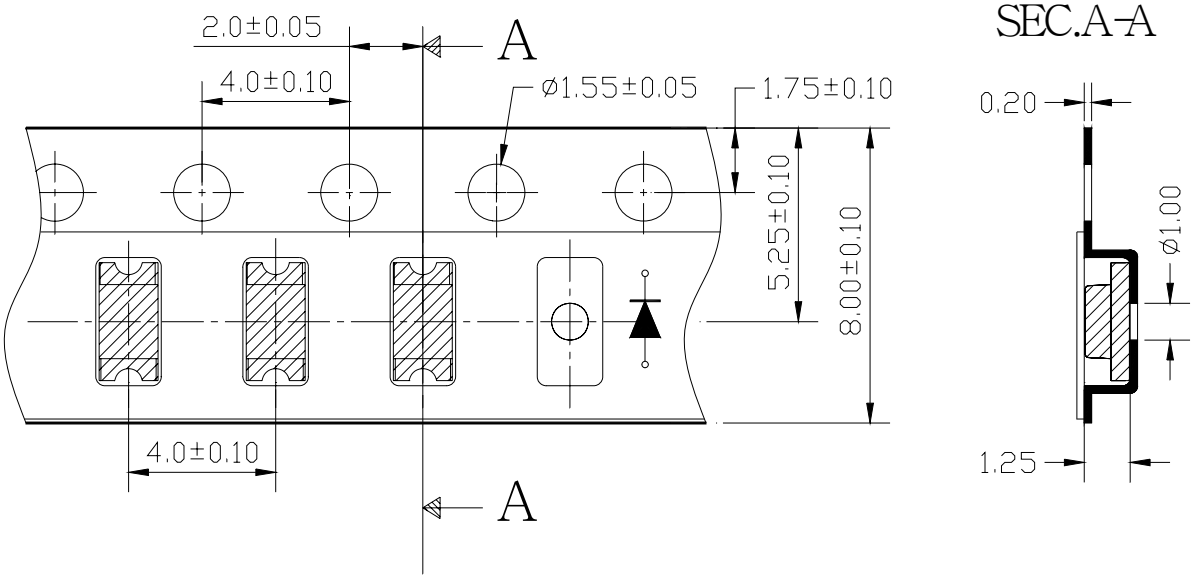

Reliability Test Items And Conditions:

The reliability of products shall be satisfied with items listed below:

Confidence level: 90%.

LTPD: 10%.

1) Test Items and Results:

No.	Test Item	Test Hours/Cycles	Test Conditions	Sample Size	Ac/Re
1	Resistance to Soldering Heat	6 Min	Tsld=260±5℃, Min. 5sec	25pcs	0/1
2	Thermal Shock	300 Cycles	H: +100℃ 5min ∫ 10 sec L: -10℃ 5min	25pcs	0/1
3	Temperature Cycle	300 Cycles	H: +100℃ 15min ∫ 5min L: -40℃ 15min	25pcs	0/1
4	High Temperature Storage	1000Hrs.	Temp: 100℃	25pcs	0/1
5	DC Operating Life	1000Hrs.	IF=20mA	25pcs	0/1
6	Low Temperature Storage	1000Hrs.	Temp: -40℃	25pcs	0/1
7	High Temperature/ High Humidity	1000Hrs.	85℃/85%RH	25pcs	0/1

2) Criteria for Judging the Damage:

Item	Symbol	Test Conditions	Criteria for Judgment	
			Min	Max
Forward Voltage	VF	IF=20mA	---	F.V.*)×1.1
Reverse Current	IR	VR=5V	---	F.V.*)×2.0
Luminous Intensity	IV	IF=20mA	F.V.*)×0.7	---

*) F.V.: First Value.

Please read the following notes before using the product:

1. Over-current-proof

Customer must apply resistors for protection, otherwise slight voltage shift will cause big current change (Burn out will happen).

2. Storage

2.1 Do not open moisture proof bag before the products are ready to use.

2.2 Before opening the package, the LEDs should be kept at 30℃ or less and 80%RH or less.

2.3 The LEDs should be used within a year.

2.4 After opening the package, the LEDs should be kept at 30℃ or less and 60%RH or less.

2.5 The LEDs should be used within 168 hours (7 days) after opening the package.

2.6 If the moisture adsorbent material has fabled away or the LEDs have exceeded the storage time, baking treatment should be performed using the following conditions. Baking treatment: 60±5℃ for 24 hours.

3. Soldering Condition

When soldering, for Lamp without stopper type and must be leave a minimum of 3mm clearance from the base of the lens to the soldering point.

To avoided the Epoxy climb up on lead frame and was impact to non-soldering problem, dipping the lens into the solder must be avoided.

Do not apply any external stress to the lead frame during soldering while the LED is at high temperature.

Recommended soldering conditions:

Soldering Iron		Wave Soldering	
Temperature Soldering Time	300℃ Max. 3 sec. Max. (one time only)	Pre-heat Pre-heat Time Solder Wave Soldering Time	100℃ Max. 60 sec. Max. 260℃ Max. 5 sec. Max.

Note: Excessive soldering temperature and / or time might result in deformation of the LED lens or catastrophic failure of the LED.

4. Soldering Iron

Each terminal is to go to the tip of soldering iron temperature less than 260℃ for 5 seconds within once in less than the soldering iron capacity 25W. Leave two seconds and more intervals, and do soldering of each terminal. Be careful because the damage of the product is often started at the time of the hand solder.

5. Repairing

Repair should not be done after the LEDs have been soldered. When repairing is unavoidable, a double-head soldering iron should be used (as below figure). It should be confirmed beforehand whether the characteristics of the LEDs will or will not be damaged by repairing.

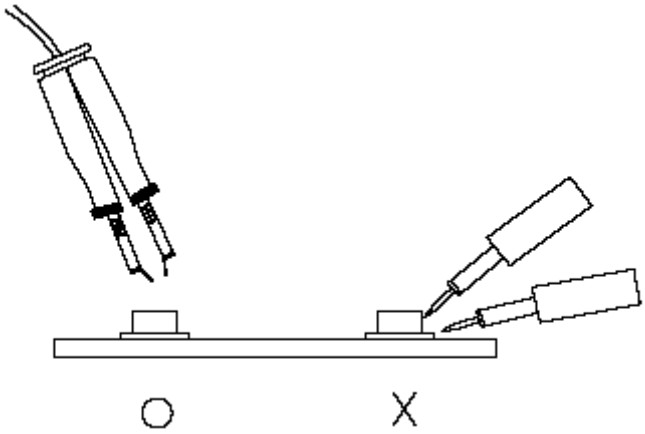

6. Caution in ESD

Static Electricity and surge damages the LED. It is recommended to use a wrist band or anti-electrostatic glove when handling the LED. All devices, equipment and machinery must be properly grounded.