OptoSupply
Light It Up

6W Pure Green &Red & Blue Star MCPCB

OSTCXBCBC1E

VER.A.3

▪Features

- Highest luminous flux
- Super energy efficiency
- Very long operating life
- Superior ESD protection
- Superior UV Resistance

▪Applications

- Small Area Illuminations
- Games
- Bollards / Security / Garden
- Audio

▪Outline Dimension

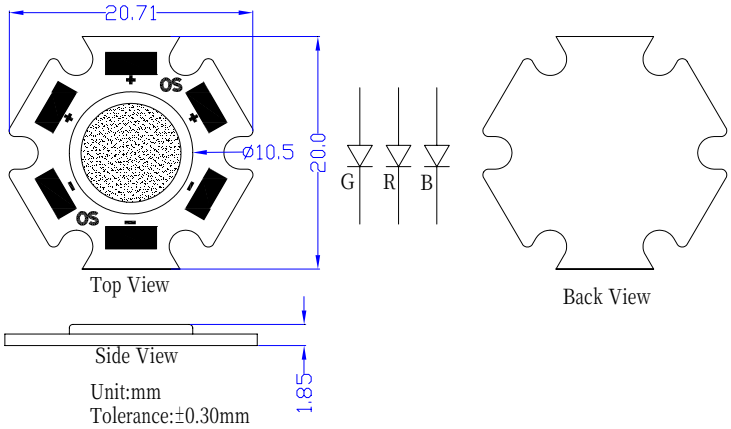

▪Absolute Maximum Rating (Ta=25℃)

Item	Symbol	Value		Unit
		Red	Green/Blue	
DC Forward Current	I_F	600	600	mA
Pulse Forward Current*	I_{FP}	800	800	mA
Reverse Voltage	V_R	5	5	V
Power Dissipation	P_D	2,100	2,700	mW
Operating Temperature	Topr	-30 ~ +85		℃
Storage Temperature	Tstg	-40 ~ +100		℃
Lead Soldering Temperature	Tsol	260℃/5sec		-

*Pulse width Max.10ms Duty ratio max 1/10

▪Directivity

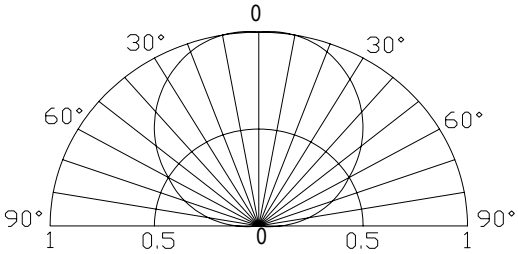

▪Electrical -Optical Characteristics (Ta=25℃)

Item	Symbol	Condition	Min.	Typ.	Max.	Unit
DC Forward Voltage	V_F (R)	I_F=500mA	2.5	3.0	3.5	V
	V_F (B/G)	I_F=500mA	3.5	4.0	4.5	V
DC Reverse Current	I_R	V_R=5V	-	-	10	μA
Domi. Wavelength	λ_D(Red)	I_F=500mA	619	624	629	nm
	λ_D(Green)	I_F=500mA	520	525	535	nm
	λ_D(Blue)	I_F=500mA	455	460	465	nm
Luminous Flux	Φv (Red)	I_F=500mA	40	50	60	lm
	Φv (Green)	I_F=500mA	80	90	100	lm
	Φv (Blue)	I_F=500mA	20	25	30	lm
50% Power Angle	$2\theta_{1/2}$	I_F=500mA	-	120		deg

Note: *1. Tolerance of chromaticity coordinates is ±10% *2. Dominant wavelength tolerance: ±1nm

*3. Tolerance of luminous Flux is ±15% *4 Don't drive at rated current more than 5s without heat sink for Xeon 1 Power emitter series.