USB Charger Schematic

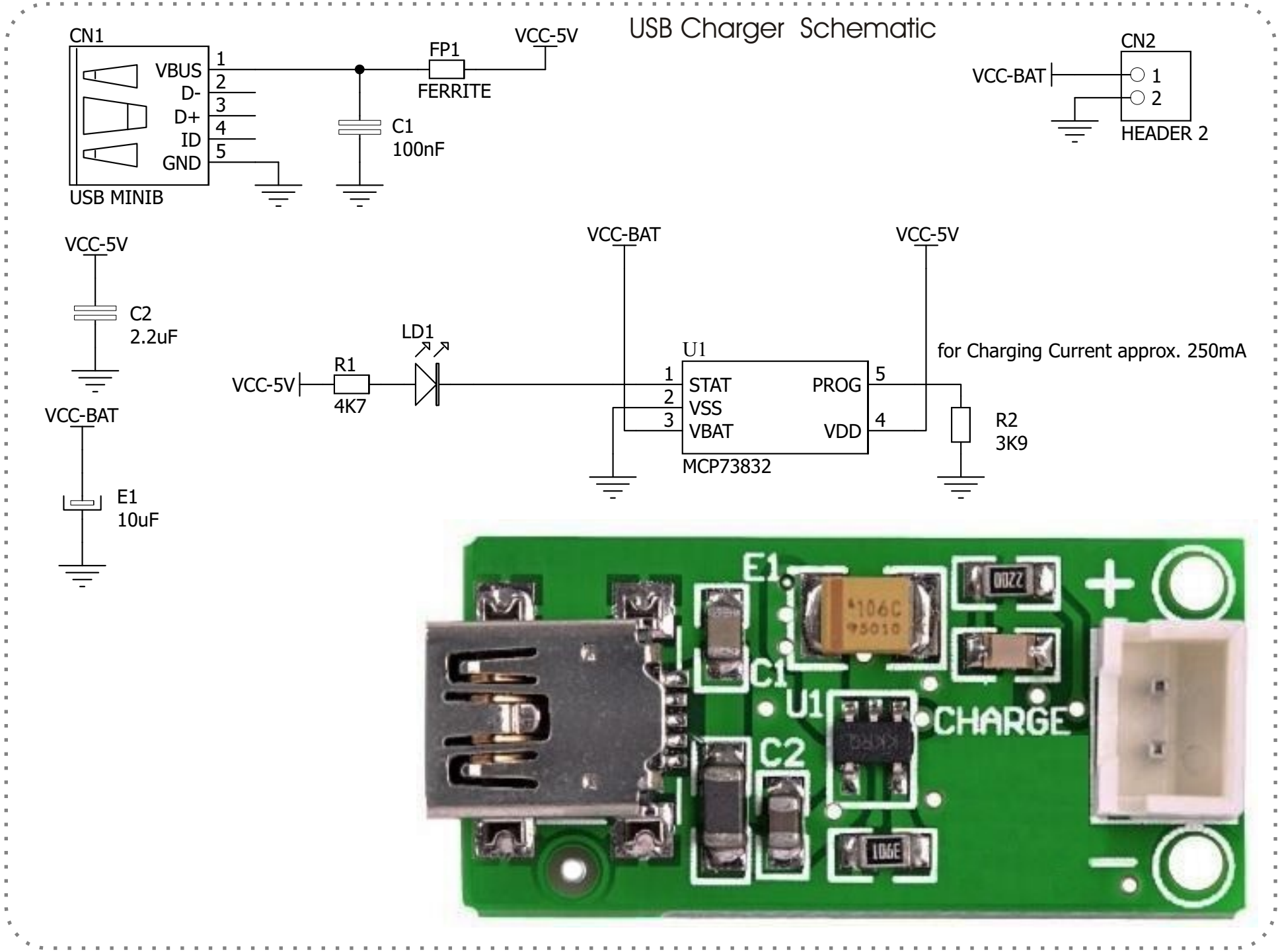

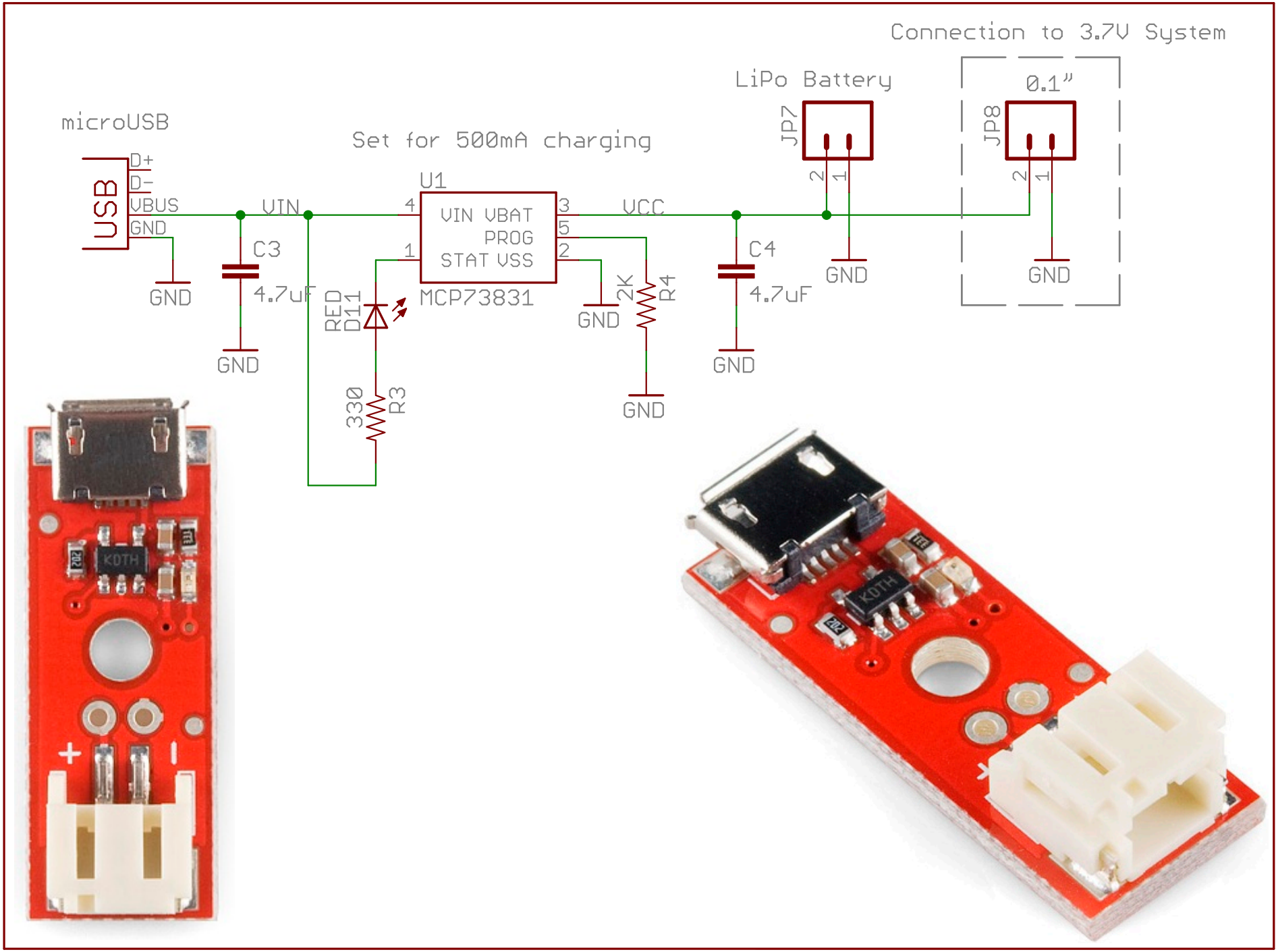
Connection to 3.7V System
LiPo Battery
0.1"
JP7
JP8
microUSB
USB
D+
D-
VBUS
GND
Set for 500mA charging
U1
VIN VBAT
PROG
STAT VSS
MCP73831
VIN
VCC
C3
4.7uF
C4
4.7uF
RED
D11
330
R3
2K
R4
GND
KDTH