3.5x2.8mm Red Top SMD
MAS1C1A-LM

■Features

- High Power SMDs
- 3.5x2.8x1.9mm Standard Directivity
- Water Clear Type
- Superior Weather-resistance
- UV Resistant Epoxy

■Applications

- Automotive Dashboard Lighting
- Traffic Signal Lamp
- Back Lighting

■Outline Dimension

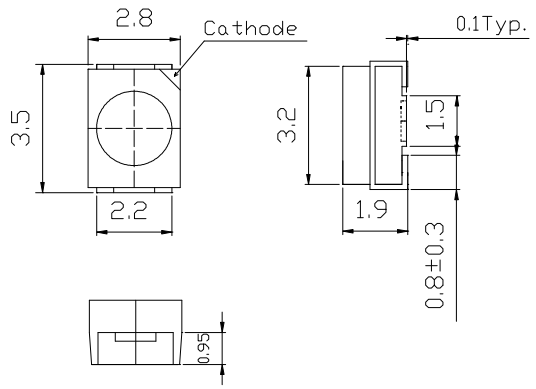

■Absolute Maximum Rating (Ta=25℃)

Item	Symbol	Value	Unit
DC Forward Current	I_F	50	mA
Pulse Forward Current*	I_{FP}	120	mA
Reverse Voltage	V_R	5	V
Power Dissipation	P_D	120	mW
Operating Temperature	Topr	-30 ~ +85	℃
Storage Temperature	Tstg	-40~ +100	℃
Lead Soldering Temperature	Tsol	260℃/5sec	–

*Pulse width Max.10ms Duty ratio max 1/10

■Directivity

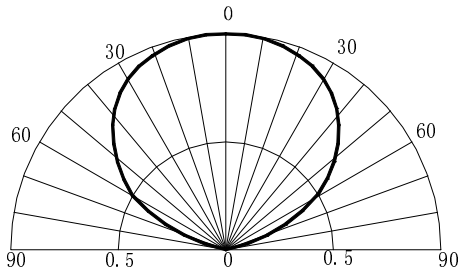

■Electrical -Optical Characteristics (Ta=25℃)

Item	Symbol	Condition	Min.	Typ.	Max.	Unit
DC Forward Voltage	V_F	I_F=20mA	1.8	2.0	2.4	V
DC Reverse Current	I_R	V_R=5V	-	-	10	μA
Domi. Wavelength	λ_D	I_F=20mA	620	625	630	nm
Luminous Intensity	Iv	I_F=20mA	1120	1560	2180	mcd
50% Power Angle	$2\theta_{1/2}$	I_F=20mA	-	120	-	deg

3.5x2.8x1.9mm Baby Pink SMD LED
84LS1C1A

▪Features

- High Luminous PLCC2 Top SMD LEDs
- 3.5x2.8x1.9mm Standard Directivity
- Long Lifetime Operation
- Superior Weather-resistance
- Red Diffused Type

▪Applications

- Backlighting (switches, keys, displays, illuminated advertising etc.)
- Substitution of Micro Incandescent Lamps
- Reading Lamps / Emergency Lighting
- Marker lights (e.g. steps, exit ways, etc.)
- Other Lighting

▪Outline Dimension

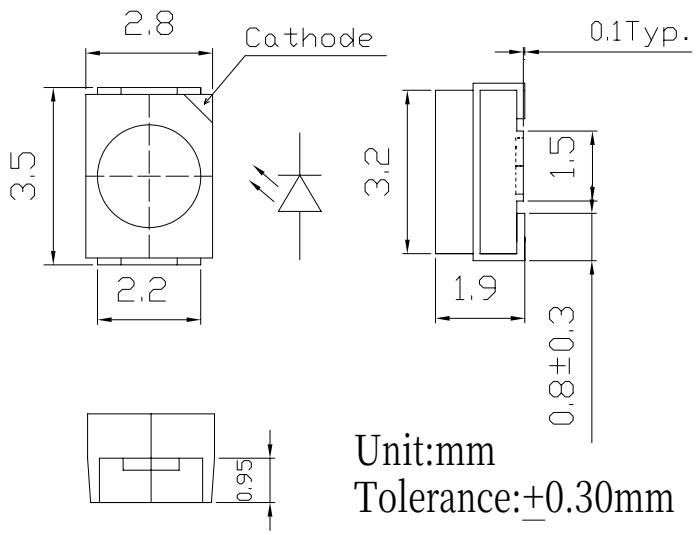

▪Absolute Maximum Rating (Ta=25°C)

Item	Symbol	Value	Unit
DC Forward Current	I_F	30	mA
Pulse Forward Current*	I_{FP}	100	mA
Reverse Voltage	V_R	5	V
Power Dissipation	P_D	108	mW
Operating Temperature	Topr	-30 ~ +85	℃
Storage Temperature	Tstg	-40~ +100	℃
Lead Soldering Temperature	Tsol	260℃/5sec	-

*Pulse width Max.10ms Duty ratio max 1/10

▪Directivity

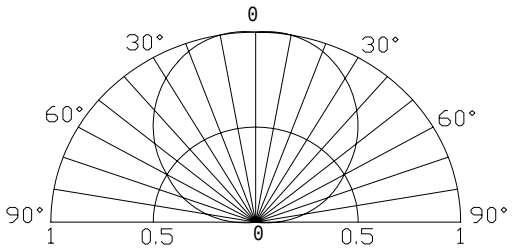

■Electrical -Optical Characteristics (Ta=25°C)

Item	Symbol	Condition	Min.	Typ.	Max.	Unit
DC Forward Voltage	V_F	I_F=20mA	2.8	3.1	3.6	V
DC Reverse Current	I_R	V_R=5V	-	-	10	μA
Luminous Flux	Φv	I_F=20mA	3.5	4.1	-	lm
Chromaticity Coordinates*	x	I_F=20mA	-	0.356	-	
	y	I_F=20mA	-	0.208	-	
50% Power Angle	$2\theta_{1/2}$	I_F=20mA	-	120	-	deg

*1 Luminous Flux Measurement allowance is ±15%
*2 Chromaticity Coordinates Measurement allowance is ±10%

3.5x2.8x1.9mm Cream SMD LED
CH4LS1C1A

▪Features

- High Luminous PLCC2 Top SMD LEDs
- 3.5x2.8x1.9mm Standard Directivity
- Long Lifetime Operation
- Superior Weather-resistance
- Yellow Diffused Type

▪Applications

- Backlighting (switches, keys, displays, illuminated advertising etc.)
- Substitution of Micro Incandescent Lamps
- Reading Lamps / Emergency Lighting
- Marker lights (e.g. steps, exit ways, etc.)
- Other Lighting

▪Outline Dimension

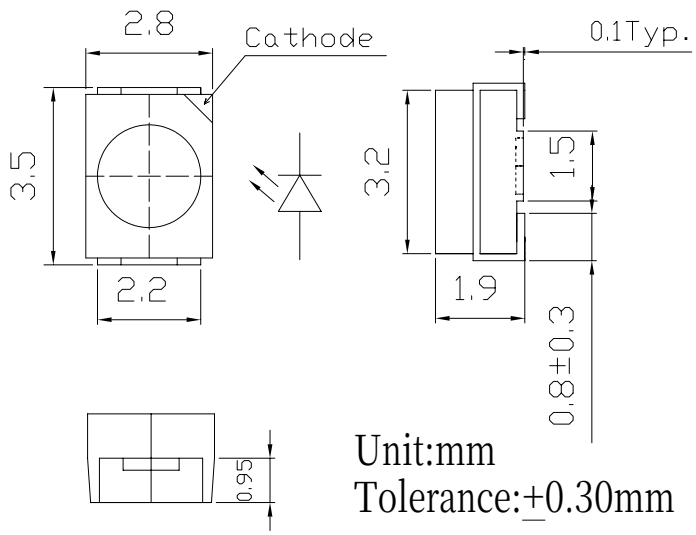

▪Absolute Maximum Rating (Ta=25°C)

Item	Symbol	Value	Unit
DC Forward Current	I_F	30	mA
Pulse Forward Current*	I_{FP}	100	mA
Reverse Voltage	V_R	5	V
Power Dissipation	P_D	108	mW
Operating Temperature	Topr	-30 ~ +85	℃
Storage Temperature	Tstg	-40~ +100	℃
Lead Soldering Temperature	Tsol	260℃/5sec	-

*Pulse width Max.10ms Duty ratio max 1/10

▪Directivity

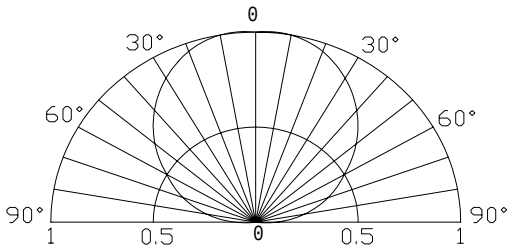

■Electrical -Optical Characteristics (Ta=25°C)

Item	Symbol	Condition	Min.	Typ.	Max.	Unit
DC Forward Voltage	V_F	I_F=20mA	2.8	3.1	3.6	V
DC Reverse Current	I_R	V_R=5V	-	-	10	μA
Luminous Flux	Φv	I_F=20mA	5.5	6.1	-	lm
Chromaticity Coordinates*	x	I_F=20mA	-	0.41	-	
	y	I_F=20mA	-	0.35	-	
50% Power Angle	$2\theta_{1/2}$	I_F=20mA	-	120	-	deg

*1 Luminous Flux Measurement allowance is ±15%
*2 Chromaticity Coordinates Measurement allowance is ±10%

3.5x2.8x1.9mm Sand SMD LED
OSCJ4LS1C1A

▪Features

- High Luminous PLCC2 Top SMD LEDs
- 3.5x2.8x1.9mm Standard Directivity
- Long Lifetime Operation
- Superior Weather-resistance
- Yellow Diffused Type

▪Applications

- Backlighting (switches, keys, displays, illuminated advertising etc.)
- Substitution of Micro Incandescent Lamps
- Reading Lamps / Emergency Lighting
- Marker lights (e.g. steps, exit ways, etc.)
- Other Lighting

▪Outline Dimension

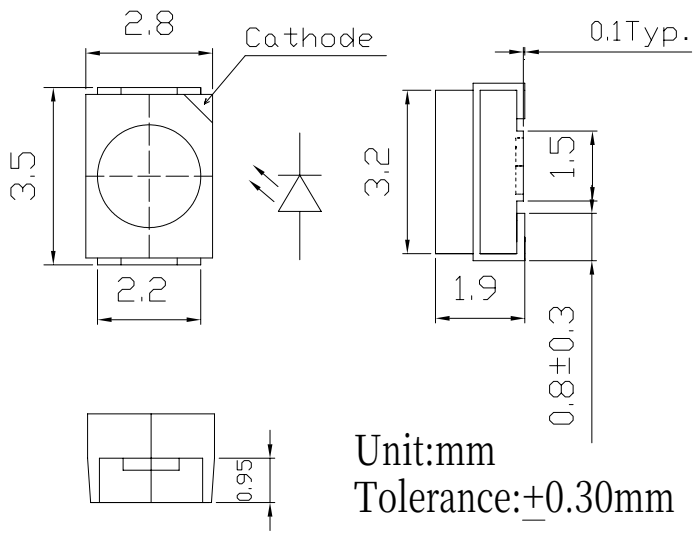

▪Absolute Maximum Rating (Ta=25°C)

Item	Symbol	Value	Unit
DC Forward Current	I_F	30	mA
Pulse Forward Current*	I_{FP}	100	mA
Reverse Voltage	V_R	5	V
Power Dissipation	P_D	108	mW
Operating Temperature	Topr	-30 ~ +85	℃
Storage Temperature	Tstg	-40~ +100	℃
Lead Soldering Temperature	Tsol	260℃/5sec	-

*Pulse width Max.10ms Duty ratio max 1/10

▪Directivity

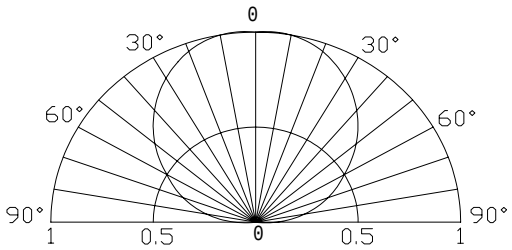

■Electrical -Optical Characteristics (Ta=25°C)

Item	Symbol	Condition	Min.	Typ.	Max.	Unit
DC Forward Voltage	V_F	I_F=20mA	2.8	3.1	3.6	V
DC Reverse Current	I_R	V_R=5V	-	-	10	μA
Luminous Flux	Φv	I_F=20mA	4.9	5.3	-	lm
Chromaticity Coordinates*	x	I_F=20mA	-	0.47	-	
	y	I_F=20mA	-	0.36	-	
50% Power Angle	$2\theta_{1/2}$	I_F=20mA	-	120	-	deg

*1 Luminous Flux Measurement allowance is ±15%
*2 Chromaticity Coordinates Measurement allowance is ±10%

3.5x2.8x1.9mm Sunshine SMD LED
OSCK4LS1C1A

▪Features

- High Luminous PLCC2 Top SMD LEDs
- 3.5x2.8x1.9mm Standard Directivity
- Long Lifetime Operation
- Superior Weather-resistance
- Yellow Diffused Type

▪Applications

- Backlighting (switches, keys, displays, illuminated advertising etc.)
- Substitution of Micro Incandescent Lamps
- Reading Lamps / Emergency Lighting
- Marker lights (e.g. steps, exit ways, etc.)
- Other Lighting

▪Outline Dimension

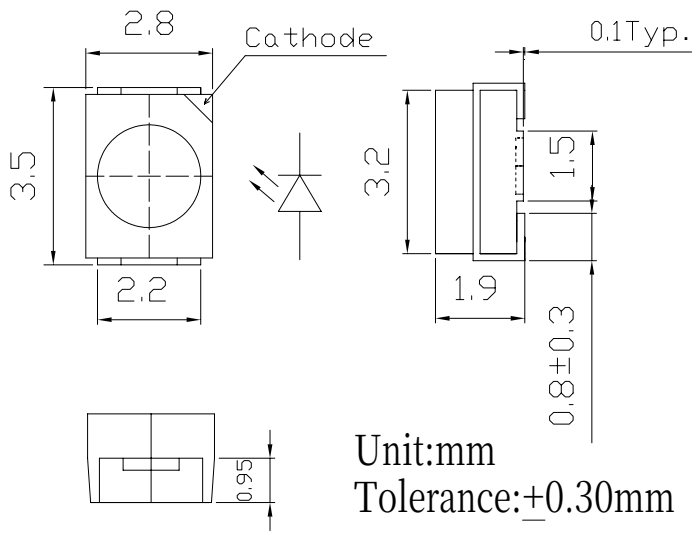

Unit:mm
Tolerance:±0.30mm

▪Absolute Maximum Rating (Ta=25°C)

Item	Symbol	Value	Unit
DC Forward Current	I_F	30	mA
Pulse Forward Current*	I_{FP}	100	mA
Reverse Voltage	V_R	5	V
Power Dissipation	P_D	108	mW
Operating Temperature	Topr	-30 ~ +85	℃
Storage Temperature	Tstg	-40~ +100	℃
Lead Soldering Temperature	Tsol	260℃/5sec	-

*Pulse width Max.10ms Duty ratio max 1/10

▪Directivity

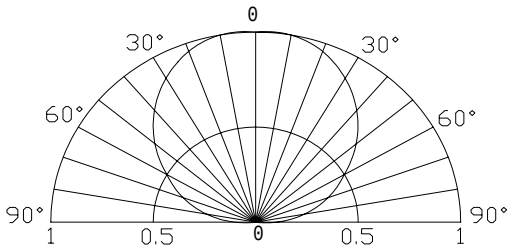

■Electrical -Optical Characteristics (Ta=25°C)

Item	Symbol	Condition	Min.	Typ.	Max.	Unit
DC Forward Voltage	V_F	I_F=20mA	2.8	3.1	3.6	V
DC Reverse Current	I_R	V_R=5V	-	-	10	μA
Luminous Flux	Φv	I_F=20mA	7.0	7.5	-	lm
Chromaticity Coordinates*	x	I_F=20mA	-	0.34	-	
	y	I_F=20mA	-	0.37	-	
50% Power Angle	$2\theta_{1/2}$	I_F=20mA	-	120	-	deg

*1 Luminous Flux Measurement allowance is ±15%
*2 Chromaticity Coordinates Measurement allowance is ±10%

3.5x2.8x1.9mm Cherry SMD LED
CF4LS1C1A

▪Features

- High Luminous PLCC2 Top SMD LEDs
- 3.5x2.8x1.9mm Standard Directivity
- Long Lifetime Operation
- Superior Weather-resistance
- Red Diffused Type

▪Applications

- Backlighting (switches, keys, displays, illuminated advertising etc.)
- Substitution of Micro Incandescent Lamps
- Reading Lamps / Emergency Lighting
- Marker lights (e.g. steps, exit ways, etc.)
- Other Lighting

▪Outline Dimension

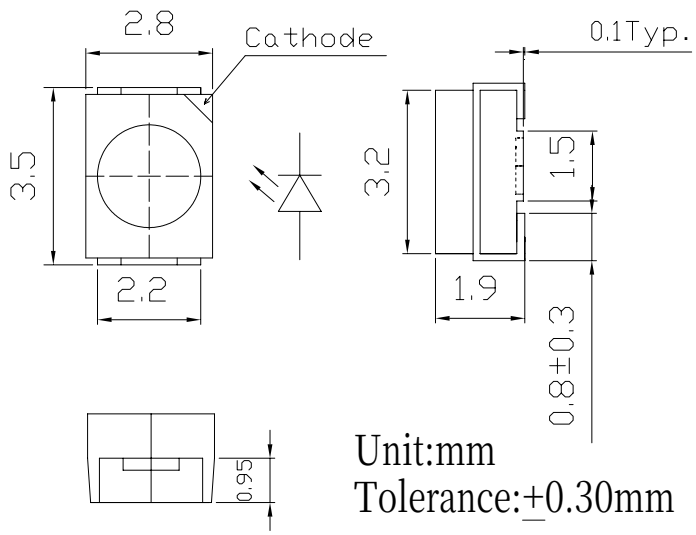

▪Absolute Maximum Rating (Ta=25°C)

Item	Symbol	Value	Unit
DC Forward Current	I_F	30	mA
Pulse Forward Current*	I_{FP}	100	mA
Reverse Voltage	V_R	5	V
Power Dissipation	P_D	108	mW
Operating Temperature	Topr	-30 ~ +85	℃
Storage Temperature	Tstg	-40~ +100	℃
Lead Soldering Temperature	Tsol	260℃/5sec	-

*Pulse width Max.10ms Duty ratio max 1/10

▪Directivity

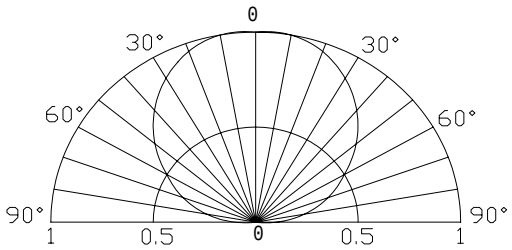

■Electrical -Optical Characteristics (Ta=25°C)

Item	Symbol	Condition	Min.	Typ.	Max.	Unit
DC Forward Voltage	V_F	I_F=20mA	2.8	3.1	3.6	V
DC Reverse Current	I_R	V_R=5V	-	-	10	μA
Luminous Flux	Φv	I_F=20mA	4.2	4.7	-	lm
Chromaticity Coordinates*	x	I_F=20mA	-	0.44	-	
	y	I_F=20mA	-	0.30	-	
50% Power Angle	$2\theta_{1/2}$	I_F=20mA	-	120	-	deg

*1 Luminous Flux Measurement allowance is ±15%
*2 Chromaticity Coordinates Measurement allowance is ±10%

3.5x2.8x1.9mm Orange Peach SMD LED
CG4LS1C1A

▪Features

- High Luminous PLCC2 Top SMD LEDs
- 3.5x2.8x1.9mm Standard Directivity
- Long Lifetime Operation
- Superior Weather-resistance
- Red Diffused Type

▪Outline Dimension

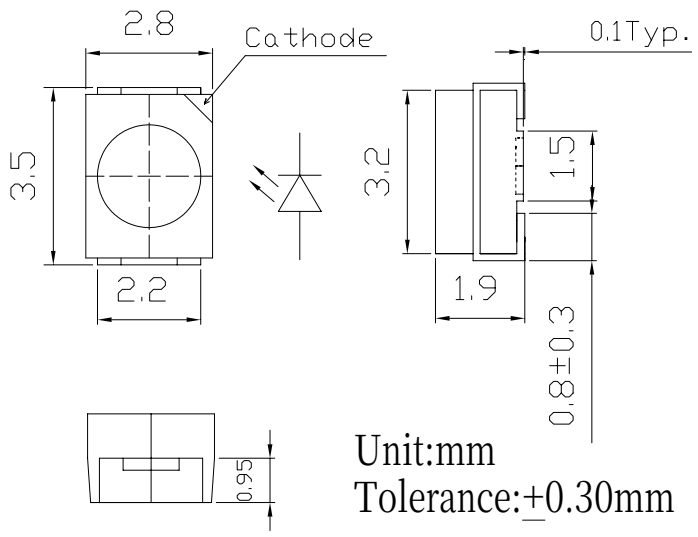

▪Applications

- Backlighting (switches, keys, displays, illuminated advertising etc.)
- Substitution of Micro Incandescent Lamps
- Reading Lamps / Emergency Lighting
- Marker lights (e.g. steps, exit ways, etc.)
- Other Lighting

▪Absolute Maximum Rating (Ta=25°C)

Item	Symbol	Value	Unit
DC Forward Current	I_F	30	mA
Pulse Forward Current*	I_{FP}	100	mA
Reverse Voltage	V_R	5	V
Power Dissipation	P_D	108	mW
Operating Temperature	Topr	-30 ~ +85	℃
Storage Temperature	Tstg	-40~ +100	℃
Lead Soldering Temperature	Tsol	260℃/5sec	-

*Pulse width Max.10ms Duty ratio max 1/10

▪Directivity

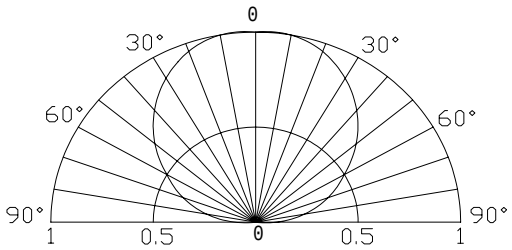

■Electrical -Optical Characteristics (Ta=25°C)

Item	Symbol	Condition	Min.	Typ.	Max.	Unit
DC Forward Voltage	V_F	I_F=20mA	2.8	3.1	3.6	V
DC Reverse Current	I_R	V_R=5V	-	-	10	μA
Luminous Flux	Φv	I_F=20mA	4.0	4.4	-	lm
Chromaticity Coordinates*	x	I_F=20mA	-	0.55	-	
	y	I_F=20mA	-	0.36	-	
50% Power Angle	$2\theta_{1/2}$	I_F=20mA	-	120	-	deg

*1 Luminous Flux Measurement allowance is ±15%
*2 Chromaticity Coordinates Measurement allowance is ±10%

3.5x2.8x1.9mm Cream SMD LED
CH4LS1C1A

▪Features

- High Luminous PLCC2 Top SMD LEDs
- 3.5x2.8x1.9mm Standard Directivity
- Long Lifetime Operation
- Superior Weather-resistance
- Yellow Diffused Type

▪Applications

- Backlighting (switches, keys, displays, illuminated advertising etc.)
- Substitution of Micro Incandescent Lamps
- Reading Lamps / Emergency Lighting
- Marker lights (e.g. steps, exit ways, etc.)
- Other Lighting

▪Outline Dimension

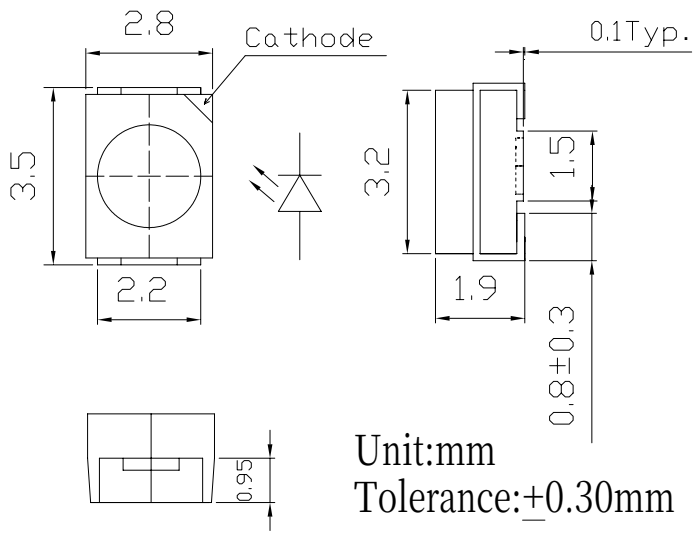

▪Absolute Maximum Rating (Ta=25°C)

Item	Symbol	Value	Unit
DC Forward Current	I_F	30	mA
Pulse Forward Current*	I_{FP}	100	mA
Reverse Voltage	V_R	5	V
Power Dissipation	P_D	108	mW
Operating Temperature	Topr	-30 ~ +85	℃
Storage Temperature	Tstg	-40~ +100	℃
Lead Soldering Temperature	Tsol	260℃/5sec	-

*Pulse width Max.10ms Duty ratio max 1/10

▪Directivity

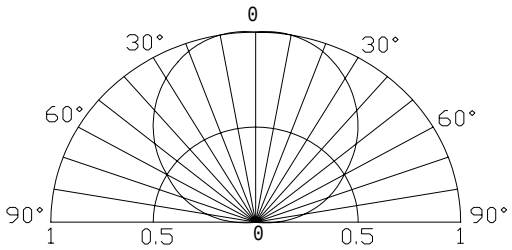

■Electrical -Optical Characteristics (Ta=25°C)

Item	Symbol	Condition	Min.	Typ.	Max.	Unit
DC Forward Voltage	V_F	I_F=20mA	2.8	3.1	3.6	V
DC Reverse Current	I_R	V_R=5V	-	-	10	μA
Luminous Flux	Φv	I_F=20mA	5.5	6.1	-	lm
Chromaticity Coordinates*	x	I_F=20mA	-	0.41	-	
	y	I_F=20mA	-	0.35	-	
50% Power Angle	$2\theta_{1/2}$	I_F=20mA	-	120	-	deg

*1 Luminous Flux Measurement allowance is ±15%
*2 Chromaticity Coordinates Measurement allowance is ±10%

3.5x2.8x1.9mm Sand SMD LED
CJ4LS1C1A

▪Features

- High Luminous PLCC2 Top SMD LEDs
- 3.5x2.8x1.9mm Standard Directivity
- Long Lifetime Operation
- Superior Weather-resistance
- Yellow Diffused Type

▪Applications

- Backlighting (switches, keys, displays, illuminated advertising etc.)
- Substitution of Micro Incandescent Lamps
- Reading Lamps / Emergency Lighting
- Marker lights (e.g. steps, exit ways, etc.)
- Other Lighting

▪Outline Dimension

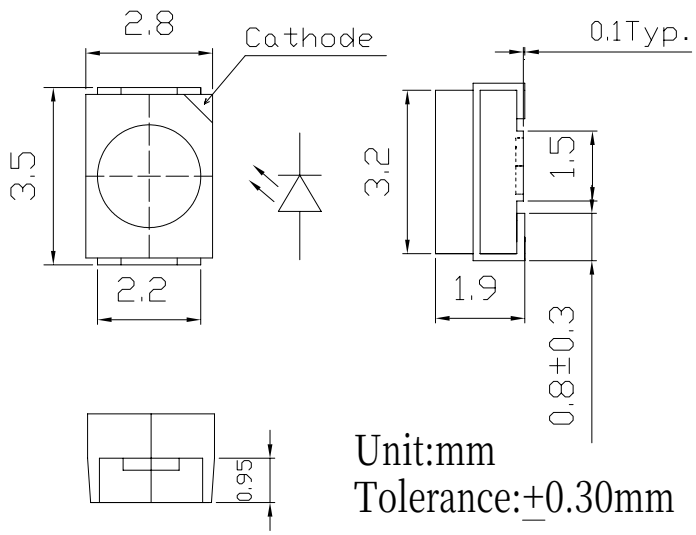

▪Absolute Maximum Rating (Ta=25°C)

Item	Symbol	Value	Unit
DC Forward Current	I_F	30	mA
Pulse Forward Current*	I_{FP}	100	mA
Reverse Voltage	V_R	5	V
Power Dissipation	P_D	108	mW
Operating Temperature	Topr	-30 ~ +85	℃
Storage Temperature	Tstg	-40~ +100	℃
Lead Soldering Temperature	Tsol	260℃/5sec	-

*Pulse width Max.10ms Duty ratio max 1/10

▪Directivity

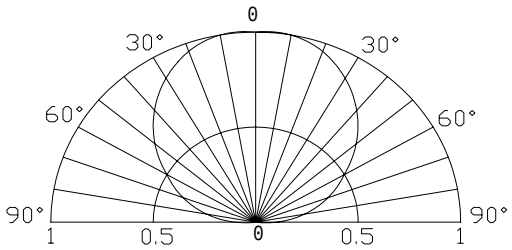

■Electrical -Optical Characteristics (Ta=25°C)

Item	Symbol	Condition	Min.	Typ.	Max.	Unit
DC Forward Voltage	V_F	I_F=20mA	2.8	3.1	3.6	V
DC Reverse Current	I_R	V_R=5V	-	-	10	μA
Luminous Flux	Φv	I_F=20mA	4.9	5.3	-	lm
Chromaticity Coordinates*	x	I_F=20mA	-	0.47	-	
	y	I_F=20mA	-	0.36	-	
50% Power Angle	$2\theta_{1/2}$	I_F=20mA	-	120	-	deg

*1 Luminous Flux Measurement allowance is ±15%
*2 Chromaticity Coordinates Measurement allowance is ±10%

3.5x2.8x1.9mm Sunshine SMD LED
CK4LS1C1A

▪Features

- High Luminous PLCC2 Top SMD LEDs
- 3.5x2.8x1.9mm Standard Directivity
- Long Lifetime Operation
- Superior Weather-resistance
- Yellow Diffused Type

▪Outline Dimension

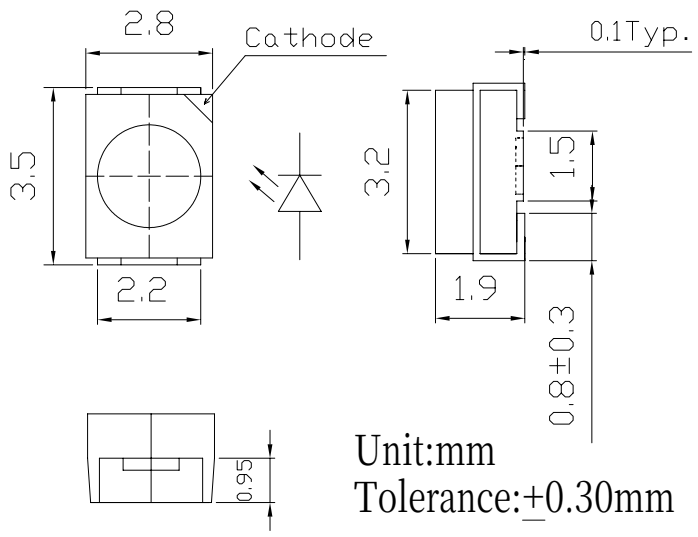

▪Applications

- Backlighting (switches, keys, displays, illuminated advertising etc.)
- Substitution of Micro Incandescent Lamps
- Reading Lamps / Emergency Lighting
- Marker lights (e.g. steps, exit ways, etc.)
- Other Lighting

▪Absolute Maximum Rating (Ta=25°C)

Item	Symbol	Value	Unit
DC Forward Current	I_F	30	mA
Pulse Forward Current*	I_{FP}	100	mA
Reverse Voltage	V_R	5	V
Power Dissipation	P_D	108	mW
Operating Temperature	Topr	-30 ~ +85	℃
Storage Temperature	Tstg	-40~ +100	℃
Lead Soldering Temperature	Tsol	260℃/5sec	-

*Pulse width Max.10ms Duty ratio max 1/10

▪Directivity

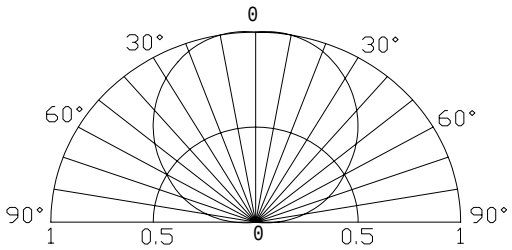

■Electrical -Optical Characteristics (Ta=25°C)

Item	Symbol	Condition	Min.	Typ.	Max.	Unit
DC Forward Voltage	V_F	I_F=20mA	2.8	3.1	3.6	V
DC Reverse Current	I_R	V_R=5V	-	-	10	μA
Luminous Flux	Φv	I_F=20mA	7.0	7.5	-	lm
Chromaticity Coordinates*	x	I_F=20mA	-	0.34	-	
	y	I_F=20mA	-	0.37	-	
50% Power Angle	$2\theta_{1/2}$	I_F=20mA	-	120	-	deg

*1 Luminous Flux Measurement allowance is ±15%
*2 Chromaticity Coordinates Measurement allowance is ±10%

3.5x2.8x1.9mm Fluorescent Green Color SMD LED
G74LS1C1A

■Features

- High Luminous PLCC2 Top SMD LEDs
- 3.5x2.8x1.9mm Standard Directivity
- Long Lifetime Operation
- Superior Weather-resistance
- Green Diffused Type

■Applications

- Backlighting (switches, keys, displays, illuminated advertising etc.)
- Substitution of Micro Incandescent Lamps
- Reading Lamps / Emergency Lighting
- Marker lights (e.g. steps, exit ways, etc.)
- Other Lighting

■Outline Dimension

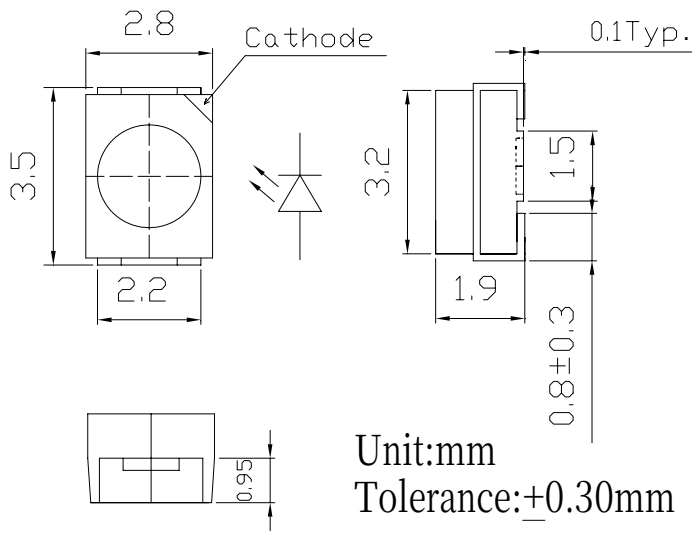

■Absolute Maximum Rating (Ta=25°C)

Item	Symbol	Value	Unit
DC Forward Current	I_F	30	mA
Pulse Forward Current*	I_{FP}	100	mA
Reverse Voltage	V_R	5	V
Power Dissipation	P_D	108	mW
Operating Temperature	Topr	-30 ~ +85	℃
Storage Temperature	Tstg	-40~ +100	℃
Lead Soldering Temperature	Tsol	260℃/5sec	-

*Pulse width Max.10ms Duty ratio max 1/10

■Directivity

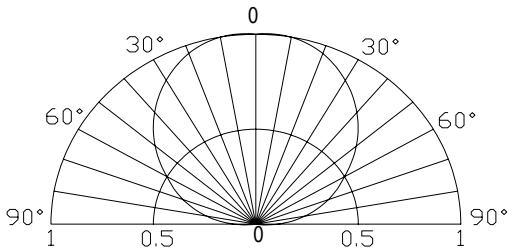

■Electrical -Optical Characteristics (Ta=25°C)

Item	Symbol	Condition	Min.	Typ.	Max.	Unit
DC Forward Voltage	V_F	I_F=20mA	2.9	3.1	3.6	V
DC Reverse Current	I_R	V_R=5V	-	-	10	μA
Luminous Intensity*	Iv	I_F=20mA	1560	2180	-	mcd
Luminous Flux	Φv	I_F=20mA	6.5	7.5	-	lm
Chromaticity Coordinates*	x	I_F=20mA	-	0.35	-	
	y	I_F=20mA	-	0.50	-	
50% Power Angle	$2\theta_{1/2}$	I_F=20mA	-	120	-	deg

*1 Tolerance of chromaticity coordinate is ±10%

*2 Tolerance of luminous Flux is ±15%

CNAS IAF ISO 9001: 2008
www.optosupply.com RoHS Compliant EU 2002/95/EC
REACH The new EU chemicals legislation
ATTENTION OBSERVE PRECAUTIONS ELECTROSTATIC SENSITIVE DEVICES

3.5x2.8x1.9mm Pure White SMD LED
W44LS1C1A

■Features

- High Luminous PLCC2 Top SMD LEDs
- 3.5x2.8x1.9mm Standard Directivity
- Long Lifetime Operation
- Superior Weather-resistance
- Yellow Diffused Type

■Applications

- Backlighting (switches, keys, displays, illuminated advertising etc.)
- Substitution of Micro Incandescent Lamps
- Reading Lamps / Emergency Lighting
- Marker lights (e.g. steps, exit ways, etc.)
- Other Lighting

■Outline Dimension

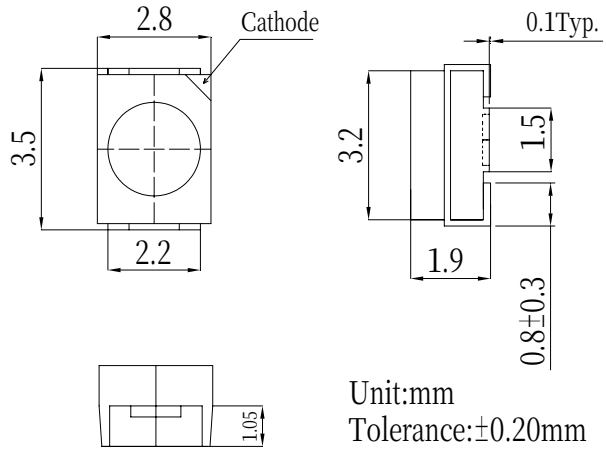

■Absolute Maximum Rating (Ta=25°C)

Item	Symbol	Value	Unit
DC Forward Current	I_F	30	mA
Pulse Forward Current*	I_{FP}	100	mA
Reverse Voltage	V_R	5	V
Power Dissipation	P_D	108	mW
Operating Temperature	Topr	-30 ~ +85	℃
Storage Temperature	Tstg	-40~ +100	℃
Lead Soldering Temperature	Tsol	260℃/5sec	-

*Pulse width Max.10ms Duty ratio max 1/10

■Directivity

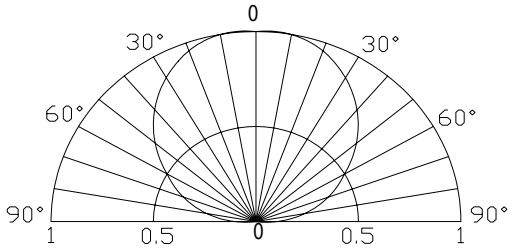

■Electrical -Optical Characteristics (Ta=25°C)

Item	Symbol	Condition	Min.	Typ.	Max.	Unit
DC Forward Voltage	V_F	I_F=20mA	2.9	3.1	3.6	V
DC Reverse Current	I_R	V_R=5V	-	-	10	μA
Luminous Flux	Φv	I_F=20mA	6	7	-	lm
Color Temperature	CCT	I_F=20mA	-	6500	-	K
Chromaticity Coordinates*	x	I_F=20mA	-	0.31	-	
	y	I_F=20mA	-	0.33	-	
50% Power Angle	$2\theta_{1/2}$	I_F=20mA	-	120	-	deg

*1 Tolerance of chromaticity coordinate is ±10%

*2 Tolerance of luminous intensity is ±15%

ATTENTION
OBSERVE PRECAUTIONS
ELECTROSTATIC
SENSITIVE DEVICES

3.5x2.8x1.9mm Sakura Color SMD LED
K64LS1C1A

■Features

- High Luminous PLCC2 Top SMD LEDs
- 3.5x2.8x1.9mm Standard Directivity
- Superior Weather-resistance
- UV Resistant Silicone
- Red Diffused Type

■Applications

- Electronic Signs And Signals
- Small Area Illuminations
- Back Lighting
- Other Lighting

■Outline Dimension

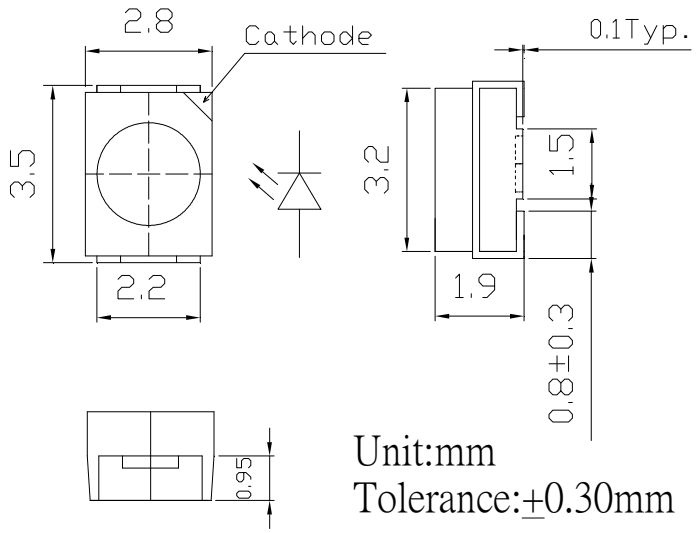

■Absolute Maximum Rating (Ta=25℃)

Item	Symbol	Value	Unit
DC Forward Current	I_F	30	mA
Pulse Forward Current*	I_{FP}	100	mA
Reverse Voltage	V_R	5	V
Power Dissipation	P_D	108	mW
Operating Temperature	Topr	-30 ~ +85	℃
Storage Temperature	Tstg	-40 ~ +100	℃
Lead Soldering Temperature	Tsol	260℃/5sec	-

*Pulse width Max 10ms , Duty ratio max 1/10

■Directivity

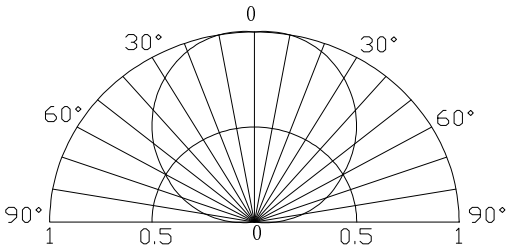

■Electrical -Optical Characteristics (Ta=25℃)

Item	Symbol	Condition	Min.	Typ.	Max.	Unit
DC Forward Voltage	V_F	I_F=20mA	2.9	3.1	3.6	V
DC Reverse Current	I_R	V_R=5V	-	-	10	μA
Luminous Intensity*	Iv	I_F=20mA	750	1000	-	mcd
Luminous Flux*	Φv	I_F=20mA	2.5	3.5	-	lm
Chromaticity Coordinates*	x	I_F=20mA	-	0.25	-	
	y	I_F=20mA	-	0.14	-	
50% Power Angle	$2\theta_{1/2}$	I_F=20mA	-	120	-	deg

*1 Tolerance of chromaticity coordinates is ±10%
*2 Tolerance of luminous Intensity is ±15%

CNAS IAF ISO 9001: 2008
www.optosupply.com RoHS Compliant EU 2002/95/EC
REACH The new EU chemicals legislation
ATTENTION OBSERVE PRECAUTIONS ELECTROSTATIC SENSITIVE DEVICES

3.5x2.8x1.9mm Sky SMD LED
C24LS1C1A

▪Features

- High Luminous PLCC2 Top SMD LEDs
- 3.5x2.8x1.9mm Standard Directivity
- Long Lifetime Operation
- Superior Weather-resistance
- Green Diffused Type

▪Applications

- Backlighting (switches, keys, displays, illuminated advertising etc.)
- Substitution of Micro Incandescent Lamps
- Reading Lamps / Emergency Lighting
- Marker lights (e.g. steps, exit ways, etc.)
- Other Lighting

▪Outline Dimension

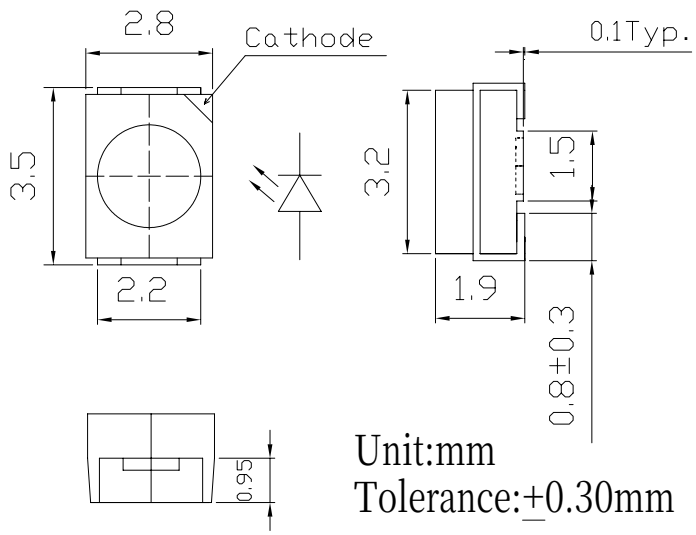

Unit:mm
Tolerance:±0.30mm

▪Absolute Maximum Rating (Ta=25°C)

Item	Symbol	Value	Unit
DC Forward Current	I_F	30	mA
Pulse Forward Current*	I_{FP}	100	mA
Reverse Voltage	V_R	5	V
Power Dissipation	P_D	108	mW
Operating Temperature	Topr	-30 ~ +85	℃
Storage Temperature	Tstg	-40~ +100	℃
Lead Soldering Temperature	Tsol	260℃/5sec	-

*Pulse width Max.10ms Duty ratio max 1/10

▪Directivity

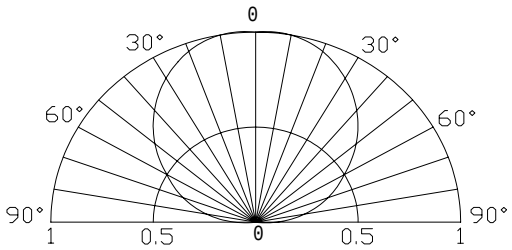

■Electrical -Optical Characteristics (Ta=25°C)

Item	Symbol	Condition	Min.	Typ.	Max.	Unit
DC Forward Voltage	V_F	I_F=20mA	2.8	3.1	3.6	V
DC Reverse Current	I_R	V_R=5V	-	-	10	μA
Luminous Flux	Φv	I_F=20mA	4.0	4.5	-	lm
Chromaticity Coordinates*	x	I_F=20mA	-	0.19	-	
	y	I_F=20mA	-	0.15	-	
50% Power Angle	$2\theta_{1/2}$	I_F=20mA	-	120	-	deg

*1 Luminous Flux Measurement allowance is ±15%
*2 Chromaticity Coordinates Measurement allowance is ±10%

3.5x2.8x1.9mm Cyan SMD LED
C34LS1C1A

▪Features

- High Luminous PLCC2 Top SMD LEDs
- 3.5x2.8x1.9mm Standard Directivity
- Long Lifetime Operation
- Superior Weather-resistance
- Green Diffused Type

▪Applications

- Backlighting (switches, keys, displays, illuminated advertising etc.)
- Substitution of Micro Incandescent Lamps
- Reading Lamps / Emergency Lighting
- Marker lights (e.g. steps, exit ways, etc.)
- Other Lighting

▪Outline Dimension

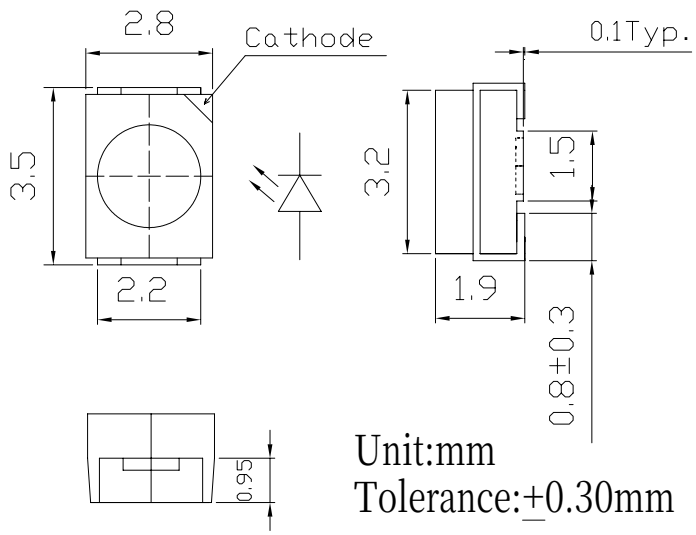

▪Absolute Maximum Rating (Ta=25°C)

Item	Symbol	Value	Unit
DC Forward Current	I_F	30	mA
Pulse Forward Current*	I_{FP}	100	mA
Reverse Voltage	V_R	5	V
Power Dissipation	P_D	108	mW
Operating Temperature	Topr	-30 ~ +85	℃
Storage Temperature	Tstg	-40~ +100	℃
Lead Soldering Temperature	Tsol	260℃/5sec	-

*Pulse width Max.10ms Duty ratio max 1/10

▪Directivity

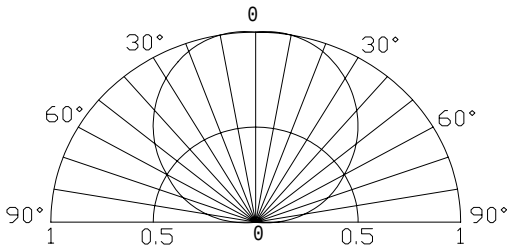

■Electrical -Optical Characteristics (Ta=25°C)

Item	Symbol	Condition	Min.	Typ.	Max.	Unit
DC Forward Voltage	V_F	I_F=20mA	2.8	3.1	3.6	V
DC Reverse Current	I_R	V_R=5V	-	-	10	μA
Luminous Flux	Φv	I_F=20mA	6.0	6.7	-	lm
Chromaticity Coordinates*	x	I_F=20mA	-	0.208	-	
	y	I_F=20mA	-	0.256	-	
50% Power Angle	$2\theta_{1/2}$	I_F=20mA	-	120	-	deg

*1 Luminous Flux Measurement allowance is ±15%
*2 Chromaticity Coordinates Measurement allowance is ±10%

3.5x2.8x1.9mm Aqua SMD LED
C44LS1C1A

▪Features

- High Luminous PLCC2 Top SMD LEDs
- 3.5x2.8x1.9mm Standard Directivity
- Long Lifetime Operation
- Superior Weather-resistance
- Green Diffused Type

▪Applications

- Backlighting (switches, keys, displays, illuminated advertising etc.)
- Substitution of Micro Incandescent Lamps
- Reading Lamps / Emergency Lighting
- Marker lights (e.g. steps, exit ways, etc.)
- Other Lighting

▪Outline Dimension

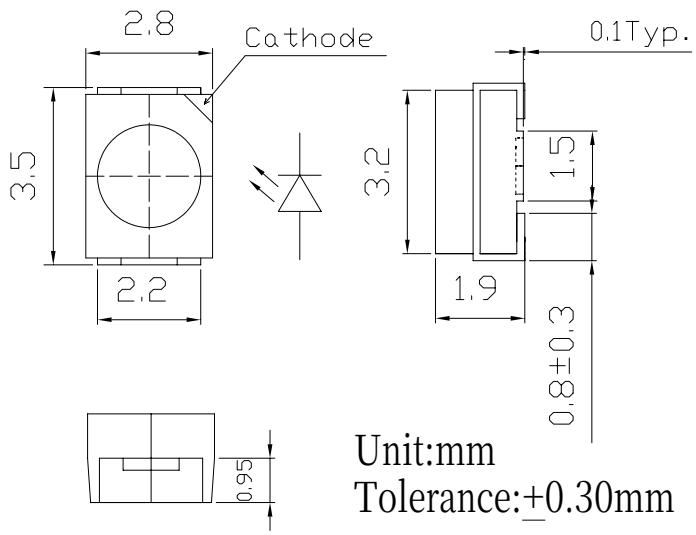

▪Absolute Maximum Rating (Ta=25°C)

Item	Symbol	Value	Unit
DC Forward Current	I_F	30	mA
Pulse Forward Current*	I_{FP}	100	mA
Reverse Voltage	V_R	5	V
Power Dissipation	P_D	108	mW
Operating Temperature	Topr	-30 ~ +85	℃
Storage Temperature	Tstg	-40~ +100	℃
Lead Soldering Temperature	Tsol	260℃/5sec	-

*Pulse width Max.10ms Duty ratio max 1/10

▪Directivity

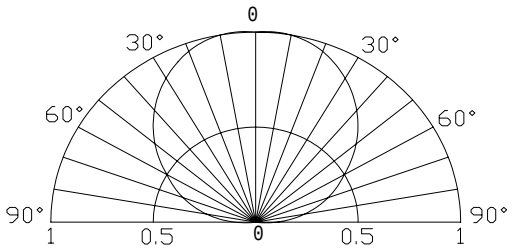

■Electrical -Optical Characteristics (Ta=25°C)

Item	Symbol	Condition	Min.	Typ.	Max.	Unit
DC Forward Voltage	V_F	I_F=20mA	2.8	3.1	3.6	V
DC Reverse Current	I_R	V_R=5V	-	-	10	μA
Luminous Flux	Φv	I_F=20mA	8.0	8.6	-	lm
Chromaticity Coordinates*	x	I_F=20mA	-	0.25	-	
	y	I_F=20mA	-	0.37	-	
50% Power Angle	$2\theta_{1/2}$	I_F=20mA	-	120	-	deg

*1 Luminous Flux Measurement allowance is ±15%
*2 Chromaticity Coordinates Measurement allowance is ±10%

3.5x2.8x1.9mm Mint SMD LED
C54LS1C1A

▪Features

- High Luminous PLCC2 Top SMD LEDs
- 3.5x2.8x1.9mm Standard Directivity
- Long Lifetime Operation
- Superior Weather-resistance
- Green Diffused Type

▪Applications

- Backlighting (switches, keys, displays, illuminated advertising etc.)
- Substitution of Micro Incandescent Lamps
- Reading Lamps / Emergency Lighting
- Marker lights (e.g. steps, exit ways, etc.)
- Other Lighting

▪Outline Dimension

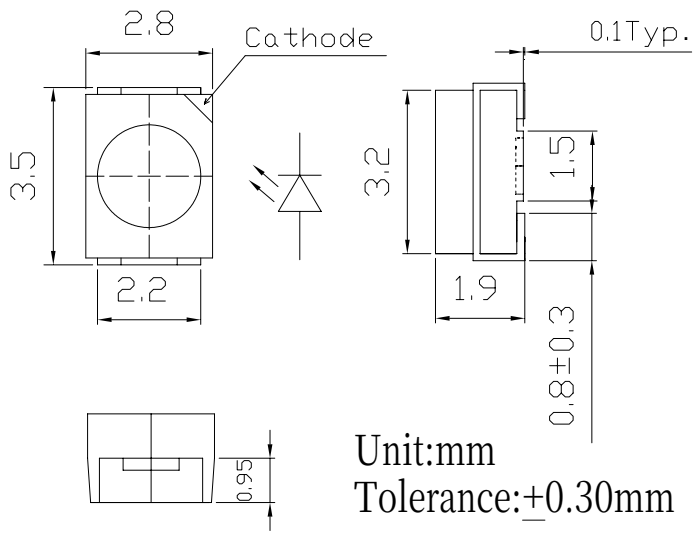

Unit:mm
Tolerance:±0.30mm

▪Absolute Maximum Rating (Ta=25°C)

Item	Symbol	Value	Unit
DC Forward Current	I_F	30	mA
Pulse Forward Current*	I_{FP}	100	mA
Reverse Voltage	V_R	5	V
Power Dissipation	P_D	108	mW
Operating Temperature	Topr	-30 ~ +85	℃
Storage Temperature	Tstg	-40~ +100	℃
Lead Soldering Temperature	Tsol	260℃/5sec	-

*Pulse width Max.10ms Duty ratio max 1/10

▪Directivity

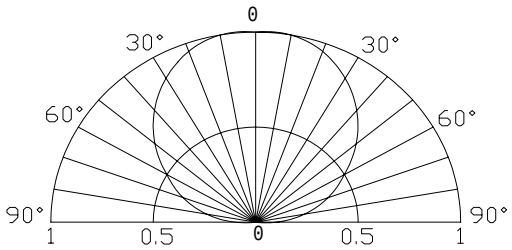

■Electrical -Optical Characteristics (Ta=25°C)

Item	Symbol	Condition	Min.	Typ.	Max.	Unit
DC Forward Voltage	V_F	I_F=20mA	2.8	3.1	3.6	V
DC Reverse Current	I_R	V_R=5V	-	-	10	μA
Luminous Flux	Φv	I_F=20mA	8.5	9.2	-	lm
Chromaticity Coordinates*	x	I_F=20mA	-	0.29	-	
	y	I_F=20mA	-	0.49	-	
50% Power Angle	$2\theta_{1/2}$	I_F=20mA	-	120	-	deg

*1 Luminous Flux Measurement allowance is ±15%
*2 Chromaticity Coordinates Measurement allowance is ±10%

3.5x2.8x1.9mm Lime SMD LED
C64LS1C1A

▪Features

- High Luminous PLCC2 Top SMD LEDs
- 3.5x2.8x1.9mm Standard Directivity
- Long Lifetime Operation
- Superior Weather-resistance
- Green Diffused Type

▪Applications

- Backlighting (switches, keys, displays, illuminated advertising etc.)
- Substitution of Micro Incandescent Lamps
- Reading Lamps / Emergency Lighting
- Marker lights (e.g. steps, exit ways, etc.)
- Other Lighting

▪Outline Dimension

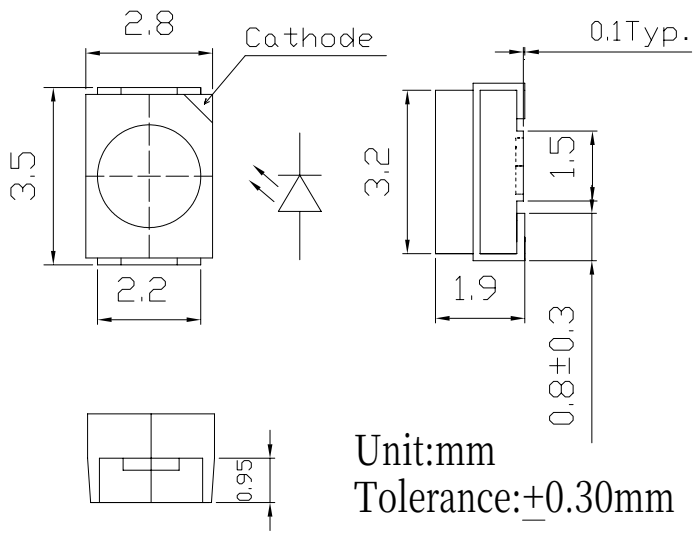

▪Absolute Maximum Rating (Ta=25°C)

Item	Symbol	Value	Unit
DC Forward Current	I_F	30	mA
Pulse Forward Current*	I_{FP}	100	mA
Reverse Voltage	V_R	5	V
Power Dissipation	P_D	108	mW
Operating Temperature	Topr	-30 ~ +85	℃
Storage Temperature	Tstg	-40~ +100	℃
Lead Soldering Temperature	Tsol	260℃/5sec	-

*Pulse width Max.10ms Duty ratio max 1/10

▪Directivity

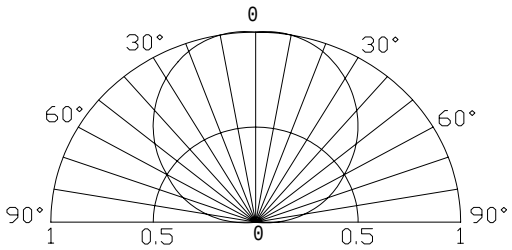

■Electrical -Optical Characteristics (Ta=25°C)

Item	Symbol	Condition	Min.	Typ.	Max.	Unit
DC Forward Voltage	V_F	I_F=20mA	2.8	3.1	3.6	V
DC Reverse Current	I_R	V_R=5V	-	-	10	μA
Luminous Flux	Φv	I_F=20mA	8.5	9.2	-	lm
Chromaticity Coordinates*	x	I_F=20mA	-	0.32	-	
	y	I_F=20mA	-	0.53	-	
50% Power Angle	$2\theta_{1/2}$	I_F=20mA	-	120	-	deg

*1 Luminous Flux Measurement allowance is ±15%
*2 Chromaticity Coordinates Measurement allowance is ±10%

3.5x2.8x1.9mm Leaf SMD LED
C74LS1C1A

▪Features

- High Luminous PLCC2 Top SMD LEDs
- 3.5x2.8x1.9mm Standard Directivity
- Long Lifetime Operation
- Superior Weather-resistance
- Green Diffused Type

▪Applications

- Backlighting (switches, keys, displays, illuminated advertising etc.)
- Substitution of Micro Incandescent Lamps
- Reading Lamps / Emergency Lighting
- Marker lights (e.g. steps, exit ways, etc.)
- Other Lighting

▪Outline Dimension

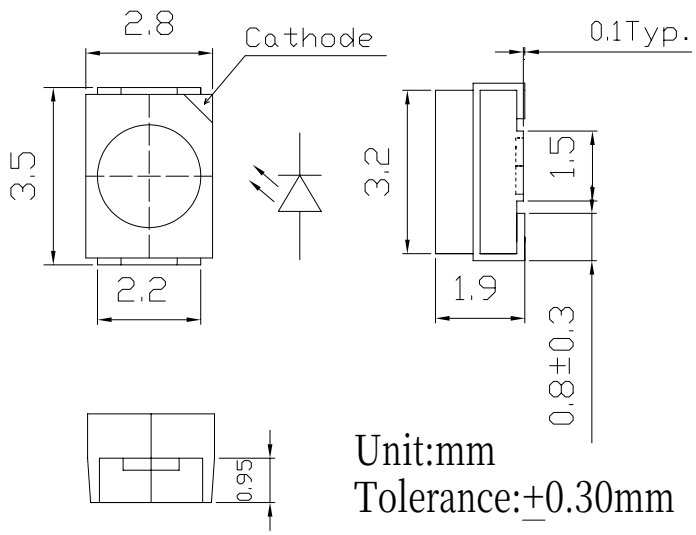

▪Absolute Maximum Rating (Ta=25°C)

Item	Symbol	Value	Unit
DC Forward Current	I_F	30	mA
Pulse Forward Current*	I_{FP}	100	mA
Reverse Voltage	V_R	5	V
Power Dissipation	P_D	108	mW
Operating Temperature	Topr	-30 ~ +85	℃
Storage Temperature	Tstg	-40~ +100	℃
Lead Soldering Temperature	Tsol	260℃/5sec	-

*Pulse width Max.10ms Duty ratio max 1/10

▪Directivity

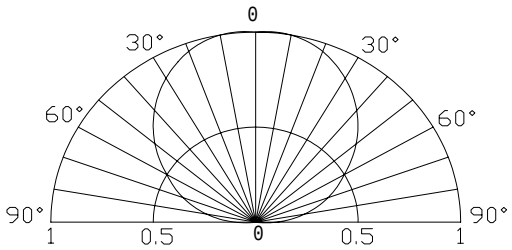

■Electrical -Optical Characteristics (Ta=25°C)

Item	Symbol	Condition	Min.	Typ.	Max.	Unit
DC Forward Voltage	V_F	I_F=20mA	2.8	3.1	3.6	V
DC Reverse Current	I_R	V_R=5V	-	-	10	μA
Luminous Flux	Φv	I_F=20mA	8.6	9.3	-	lm
Chromaticity Coordinates*	x	I_F=20mA	-	0.27	-	
	y	I_F=20mA	-	0.55	-	
50% Power Angle	$2\theta_{1/2}$	I_F=20mA	-	120	-	deg

*1 Luminous Flux Measurement allowance is ±15%
*2 Chromaticity Coordinates Measurement allowance is ±10%

3.5x2.8x1.9mm Lavender SMD LED
CD4LS1C1A

▪Features

- High Luminous PLCC2 Top SMD LEDs
- 3.5x2.8x1.9mm Standard Directivity
- Long Lifetime Operation
- Superior Weather-resistance
- Yellow Diffused Type

▪Outline Dimension

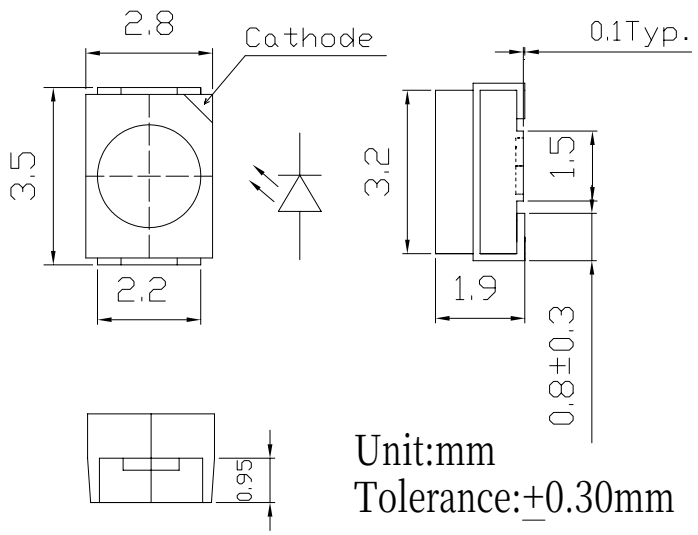

▪Applications

- Backlighting (switches, keys, displays, illuminated advertising etc.)
- Substitution of Micro Incandescent Lamps
- Reading Lamps / Emergency Lighting
- Marker lights (e.g. steps, exit ways, etc.)
- Other Lighting

▪Absolute Maximum Rating (Ta=25°C)

Item	Symbol	Value	Unit
DC Forward Current	I_F	30	mA
Pulse Forward Current*	I_{FP}	100	mA
Reverse Voltage	V_R	5	V
Power Dissipation	P_D	108	mW
Operating Temperature	Topr	-30 ~ +85	℃
Storage Temperature	Tstg	-40~ +100	℃
Lead Soldering Temperature	Tsol	260℃/5sec	-

*Pulse width Max.10ms Duty ratio max 1/10

▪Directivity

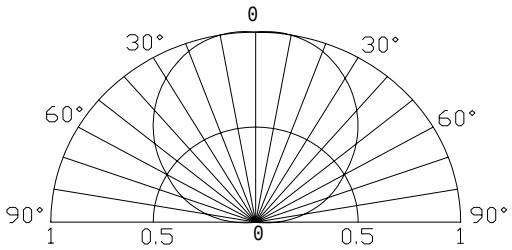

■Electrical -Optical Characteristics (Ta=25°C)

Item	Symbol	Condition	Min.	Typ.	Max.	Unit
DC Forward Voltage	V_F	I_F=20mA	2.8	3.1	3.6	V
DC Reverse Current	I_R	V_R=5V	-	-	10	μA
Luminous Flux	Φv	I_F=20mA	5.0	5.4	-	lm
Chromaticity Coordinates*	x	I_F=20mA	-	0.29	-	
	y	I_F=20mA	-	0.23	-	
50% Power Angle	$2\theta_{1/2}$	I_F=20mA	-	120	-	deg

*1 Luminous Flux Measurement allowance is ±15%
*2 Chromaticity Coordinates Measurement allowance is ±10%

3.5x2.8x1.9mm Lemon SMD LED
CL4LS1C1A

▪Features

- High Luminous PLCC2 Top SMD LEDs
- 3.5x2.8x1.9mm Standard Directivity
- Long Lifetime Operation
- Superior Weather-resistance
- Yellow Diffused Type

▪Applications

- Backlighting (switches, keys, displays, illuminated advertising etc.)
- Substitution of Micro Incandescent Lamps
- Reading Lamps / Emergency Lighting
- Marker lights (e.g. steps, exit ways, etc.)
- Other Lighting

▪Outline Dimension

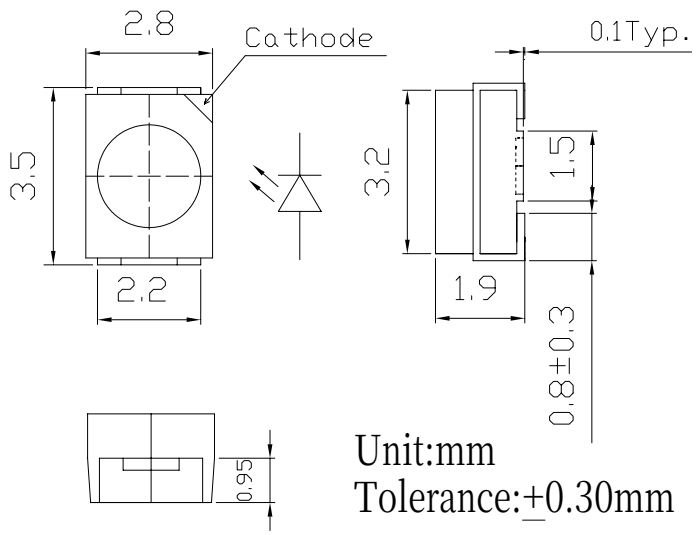

▪Absolute Maximum Rating (Ta=25°C)

Item	Symbol	Value	Unit
DC Forward Current	I_F	30	mA
Pulse Forward Current*	I_{FP}	100	mA
Reverse Voltage	V_R	5	V
Power Dissipation	P_D	108	mW
Operating Temperature	Topr	-30 ~ +85	℃
Storage Temperature	Tstg	-40~ +100	℃
Lead Soldering Temperature	Tsol	260℃/5sec	-

*Pulse width Max.10ms Duty ratio max 1/10

▪Directivity

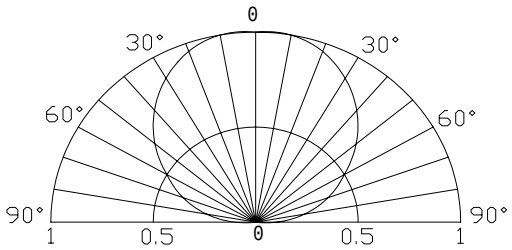

■Electrical -Optical Characteristics (Ta=25°C)

Item	Symbol	Condition	Min.	Typ.	Max.	Unit
DC Forward Voltage	V_F	I_F=20mA	2.8	3.1	3.6	V
DC Reverse Current	I_R	V_R=5V	-	-	10	μA
Luminous Flux	Φv	I_F=20mA	8.0	8.5	-	lm
Chromaticity Coordinates*	x	I_F=20mA	-	0.395	-	
	y	I_F=20mA	-	0.455	-	
50% Power Angle	$2\theta_{1/2}$	I_F=20mA	-	120	-	deg

*1 Luminous Flux Measurement allowance is ±15%
*2 Chromaticity Coordinates Measurement allowance is ±10%

3.5x2.8x1.9mm UV-Violet SMD LED
V4YLS1C1A

■Features

- High Luminous PLCC2 Top SMD LEDs
- 3.5x2.8x1.9mm Standard Directivity
- Superior Weather-resistance
- UV Resistant Silicon
- Water Clear Type

■Applications

- Automotive Dashboard Lighting
- Money Detector
- Back Lighting
- Other Lighting

■Outline Dimension

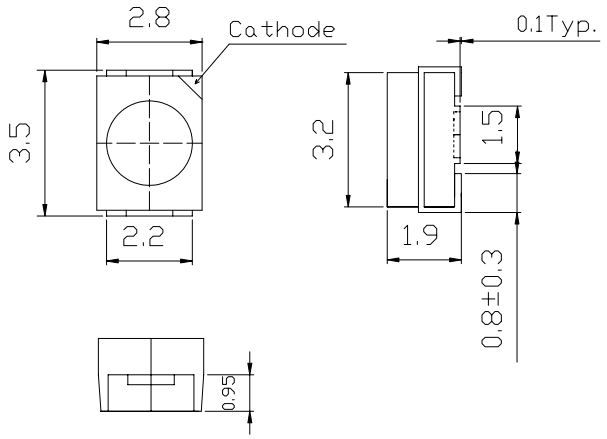

■Absolute Maximum Rating (Ta=25℃)

Item	Symbol	Value	Unit
DC Forward Current	I_F	30	mA
Pulse Forward Current*	I_{FP}	100	mA
Reverse Voltage	V_R	5	V
Power Dissipation	P_D	114	mW
Operating Temperature	Topr	-30 ~ +85	℃
Storage Temperature	Tstg	-40~ +100	℃
Lead Soldering Temperature	Tsol	260℃/5sec	-

*Pulse width Max.10ms Duty ratio max 1/10

■Directivity

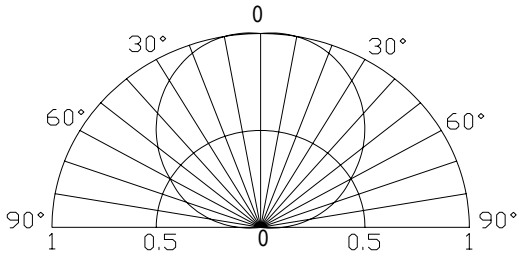

■Electrical -Optical Characteristics (Ta=25℃)

Item	Symbol	Condition	Min.	Typ.	Max.	Unit
DC Forward Voltage	V_F	I_F=20mA	3.0	3.4	3.8	V
DC Reverse Current	I_R	V_R=5V	-	-	10	μA
Peak Wavelength*	λ_p	I_F=20mA	390	395	400	nm
Radiant flux*	Φe	I_F=20mA	2.0	5.0	6.0	mW
50% Power Angle	$2\theta_{1/2}$	I_F=20mA	-	120	-	deg

*1 Tolerance of Peak wavelength is ±1nm
*2 Tolerance of luminous intensity is ±15%

ATTENTION
OBSERVE PRECAUTIONS
ELECTROSTATIC
SENSITIVE DEVICES

3.5x2.8x1.9mm Super Salmon Pink SMD LED
OGAS1C1A

■Features

- High Luminous PLCC2 Top SMD LEDs
- 3.5x2.8x1.9mm Standard Directivity
- Superior Weather-resistance
- UV Resistant Silicone
- Water Clear Type

■Applications

- Backlighting (switches, keys, etc.)
- Marker lights (e.g. steps, exit ways, etc.)
- Signal and Channel Letter
- Marker lights (e.g. steps, exit ways, etc.)
- Other Lighting

■Outline Dimension

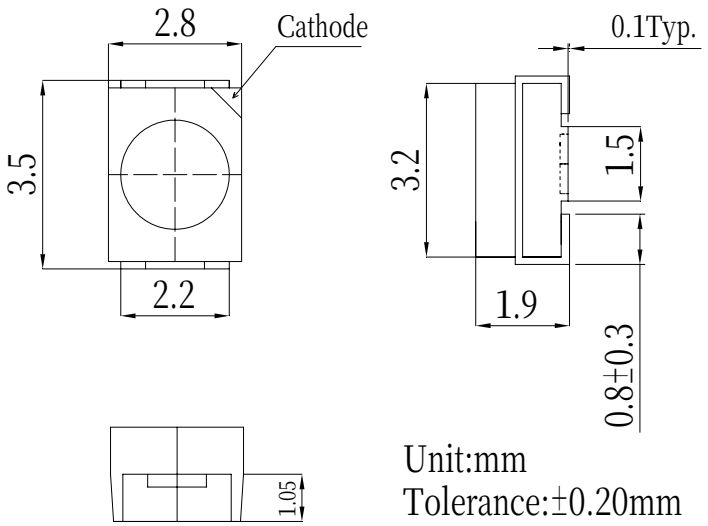

■Absolute Maximum Rating (Ta=25℃)

Item	Symbol	Value	Unit
DC Forward Current	I_F	50	mA
Pulse Forward Current*	I_{FP}	120	mA
Reverse Voltage	V_R	5	V
Power Dissipation	P_D	130	mW
Operating Temperature	Topr	-30 ~ +85	℃
Storage Temperature	Tstg	-40~ +100	℃
Lead Soldering Temperature	Tsol	260℃/5sec	-

*Pulse width Max.10ms Duty ratio max 1/10

■Directivity

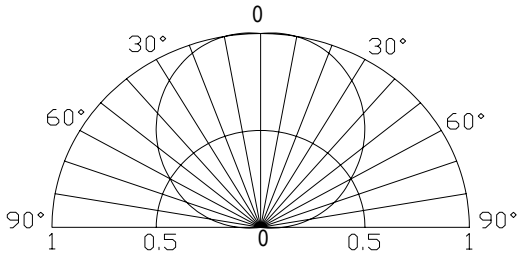

■Electrical -Optical Characteristics (Ta=25℃)

Item	Symbol	Condition	Min.	Typ.	Max.	Unit
DC Forward Voltage	V_F	I_F=20mA	1.8	2.1	2.6	V
DC Reverse Current	I_R	V_R=5V	-	-	10	μA
Domi. Wavelength*	λ_D	I_F=20mA	606	610	616	nm
Luminous Intensity*	Iv	I_F=20mA	2180	3000	-	mcd
50% Power Angle	$2\theta_{1/2}$	I_F=20mA	-	120	-	deg

*1 Tolerance of dominant wavelength is ±1nm
*2 Tolerance of luminous intensity is ±15%

■Maximum Forward Current

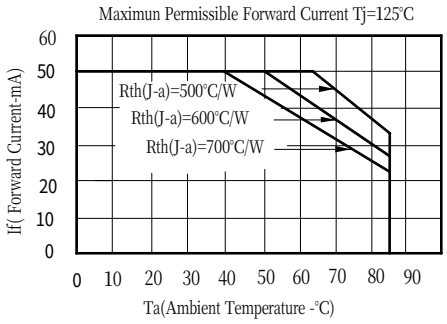

www.optosupply.com RoHS Compliant EU 2002/95/EC
REACH The new EU chemicals legislation
ATTENTION OBSERVE PRECAUTIONS ELECTROSTATIC SENSITIVE DEVICES

3.5x2.8mm Blue Top SMD
SAS1C1A-KL

■Features

- High Power SMDs
- 3.5x2.8x1.9mm Standard Directivity
- Water Clear Type
- Superior Weather-resistance
- UV Resistant Epoxy

■Applications

- Automotive Dashboard Lighting
- Traffic Signal Lamp
- Back Lighting

■Outline Dimension

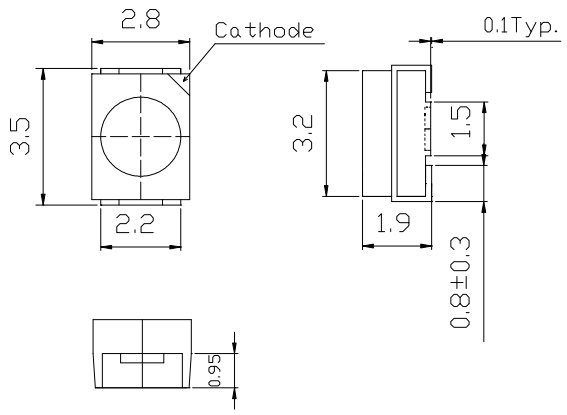

■Absolute Maximum Rating (Ta=25℃)

Item	Symbol	Value	Unit
DC Forward Current	I_F	30	mA
Pulse Forward Current*	I_{FP}	100	mA
Reverse Voltage	V_R	5	V
Power Dissipation	P_D	120	mW
Operating Temperature	Topr	-30 ~ +80	℃
Storage Temperature	Tstg	-30 ~ +100	℃
Lead Soldering Temperature	Tsol	260℃/3sec	-

*Pulse width Max.10ms Duty ratio max 1/10

■Directivity

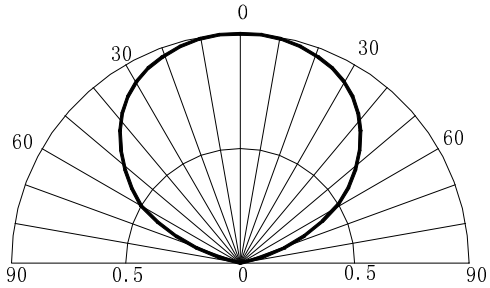

■Electrical -Optical Characteristics (Ta=25℃)

Item	Symbol	Condition	Min.	Typ.	Max.	Unit
DC Forward Voltage	V_F	I_F=20mA	2.8	3.3	3.8	V
DC Reverse Current	I_R	V_R=5V	-	-	10	μA
Domi. Wavelength	λ_D	I_F=20mA	465	470	475	nm
Luminous Intensity	Iv	I_F=20mA	750	1120	1560	mcd
50% Power Angle	$2\theta_{1/2}$	I_F=20mA	-	120	-	deg

3.5x2.8x1.9mm Magenta SMD LED
A4LS1C1A

▪Features

- High Luminous PLCC2 Top SMD LEDs
- 3.5x2.8x1.9mm Standard Directivity
- Long Lifetime Operation
- Superior Weather-resistance
- Red Diffused Type

▪Applications

- Backlighting (switches, keys, displays, illuminated advertising etc.)
- Substitution of Micro Incandescent Lamps
- Reading Lamps / Emergency Lighting
- Marker lights (e.g. steps, exit ways, etc.)
- Other Lighting

▪Outline Dimension

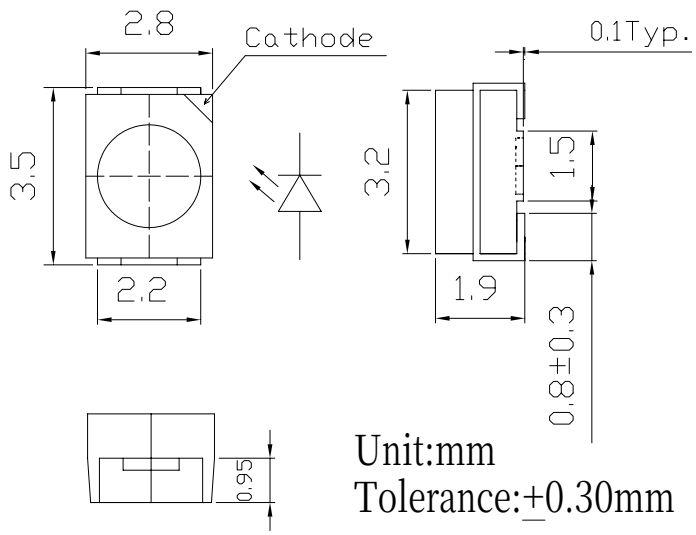

▪Absolute Maximum Rating (Ta=25°C)

Item	Symbol	Value	Unit
DC Forward Current	I_F	30	mA
Pulse Forward Current*	I_{FP}	100	mA
Reverse Voltage	V_R	5	V
Power Dissipation	P_D	108	mW
Operating Temperature	Topr	-30 ~ +85	℃
Storage Temperature	Tstg	-40~ +100	℃
Lead Soldering Temperature	Tsol	260℃/5sec	-

*Pulse width Max.10ms Duty ratio max 1/10

▪Directivity

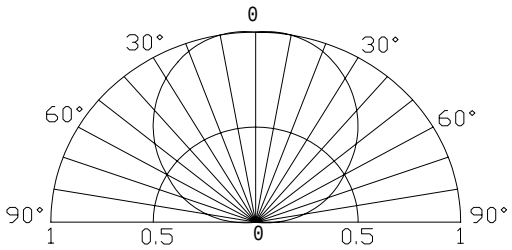

■Electrical -Optical Characteristics (Ta=25°C)

Item	Symbol	Condition	Min.	Typ.	Max.	Unit
DC Forward Voltage	V_F	I_F=20mA	2.8	3.1	3.6	V
DC Reverse Current	I_R	V_R=5V	-	-	10	μA
Luminous Flux	Φv	I_F=20mA	3.3	3.8	-	lm
Chromaticity Coordinates*	x	I_F=20mA	-	0.45	-	
	y	I_F=20mA	-	0.25	-	
50% Power Angle	$2\theta_{1/2}$	I_F=20mA	-	120	-	deg

*1 Luminous Flux Measurement allowance is ±15%
*2 Chromaticity Coordinates Measurement allowance is ±10%

3.5x2.8x1.9mm Peach/Rose Peach SMD LED
E4LS1C1A

▪Features

- High Luminous PLCC2 Top SMD LEDs
- 3.5x2.8x1.9mm Standard Directivity
- Long Lifetime Operation
- Superior Weather-resistance
- Yellow Diffused Type

▪Outline Dimension

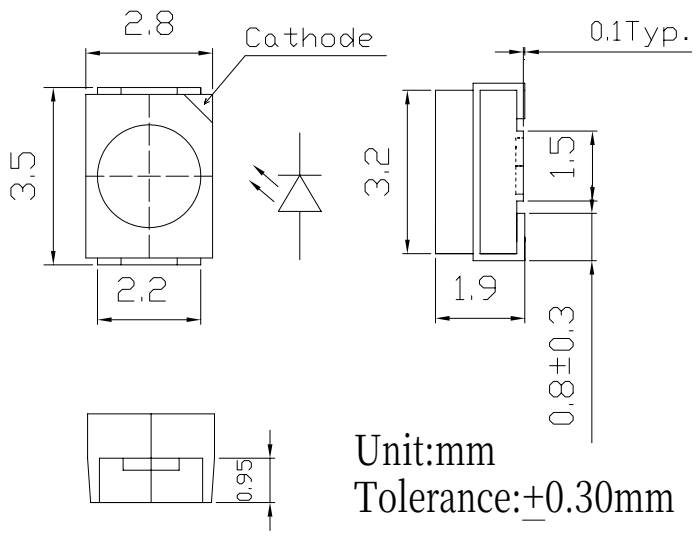

▪Applications

- Backlighting (switches, keys, displays, illuminated advertising etc.)
- Substitution of Micro Incandescent Lamps
- Reading Lamps / Emergency Lighting
- Marker lights (e.g. steps, exit ways, etc.)
- Other Lighting

▪Absolute Maximum Rating (Ta=25°C)

Item	Symbol	Value	Unit
DC Forward Current	I_F	30	mA
Pulse Forward Current*	I_{FP}	100	mA
Reverse Voltage	V_R	5	V
Power Dissipation	P_D	108	mW
Operating Temperature	Topr	-30 ~ +85	℃
Storage Temperature	Tstg	-40~ +100	℃
Lead Soldering Temperature	Tsol	260℃/5sec	-

*Pulse width Max.10ms Duty ratio max 1/10

▪Directivity

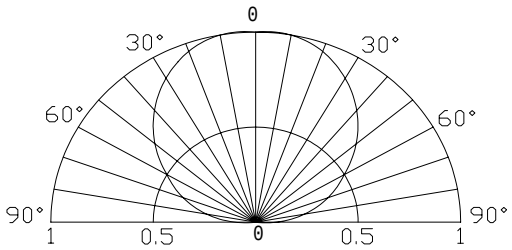

■Electrical -Optical Characteristics (Ta=25°C)

Item	Symbol	Condition	Min.	Typ.	Max.	Unit
DC Forward Voltage	V_F	I_F=20mA	2.8	3.1	3.6	V
DC Reverse Current	I_R	V_R=5V	-	-	10	μA
Luminous Flux	Φv	I_F=20mA	4.5	4.9	-	lm
Chromaticity Coordinates*	x	I_F=20mA	-	0.386	-	
	y	I_F=20mA	-	0.275	-	
50% Power Angle	$2\theta_{1/2}$	I_F=20mA	-	120	-	deg

*1 Luminous Flux Measurement allowance is ±15%
*2 Chromaticity Coordinates Measurement allowance is ±10%

3.5x2.8mm Pure Green Top SMD
DAS1C1A-LM

■Features

- High Power SMDs
- 3.5x2.8x1.9mm Standard Directivity
- Water Clear Type
- Superior Weather-resistance
- UV Resistant Epoxy

■Applications

- Automotive Dashboard Lighting
- Traffic Signal Lamp
- Back Lighting

■Outline Dimension

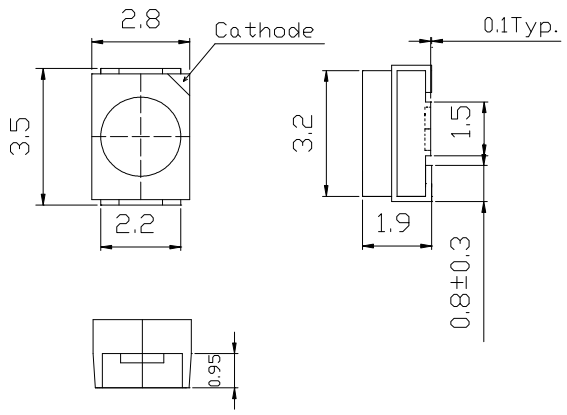

■Absolute Maximum Rating (Ta=25℃)

Item	Symbol	Value	Unit
DC Forward Current	I_F	30	mA
Pulse Forward Current*	I_{FP}	100	mA
Reverse Voltage	V_R	5	V
Power Dissipation	P_D	120	mW
Operating Temperature	Topr	-30 ~ +80	℃
Storage Temperature	Tstg	-30 ~ +100	℃
Lead Soldering Temperature	Tsol	260℃/3sec	-

*Pulse width Max.10ms Duty ratio max 1/10

■Directivity

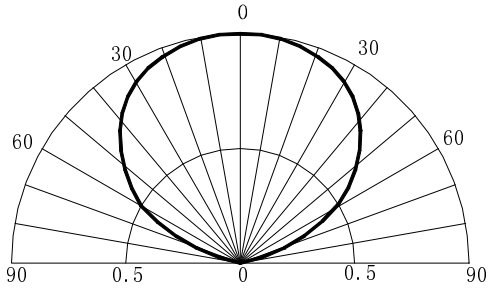

■Electrical -Optical Characteristics (Ta=25℃)

Item	Symbol	Condition	Min.	Typ.	Max.	Unit
DC Forward Voltage	V_F	I_F=20mA	2.8	3.3	3.8	V
DC Reverse Current	I_R	V_R=5V	-	-	10	μA
Domi. Wavelength	λ_D	I_F=20mA	520	525	530	nm
Luminous Intensity	Iv	I_F=20mA	1120	1560	2180	mcd
50% Power Angle	$2\theta_{1/2}$	I_F=20mA	-	120	-	deg

3.5x2.8mm Yellow Top SMD
MAS1C1A-LM

■Features

- High Power SMDs
- 3.5x2.8x1.9mm Standard Directivity
- Water Clear Type
- Superior Weather-resistance
- UV Resistant Epoxy

■Applications

- Automotive Dashboard Lighting
- Traffic Signal Lamp
- Back Lighting

■Outline Dimension

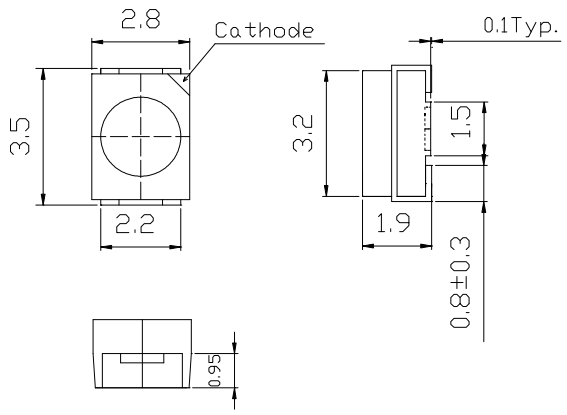

■Absolute Maximum Rating (Ta=25℃)

Item	Symbol	Value	Unit
DC Forward Current	I_F	50	mA
Pulse Forward Current*	I_{FP}	120	mA
Reverse Voltage	V_R	5	V
Power Dissipation	P_D	120	mW
Operating Temperature	Topr	-30 ~ +85	℃
Storage Temperature	Tstg	-40~ +100	℃
Lead Soldering Temperature	Tsol	260℃/5sec	-

*Pulse width Max.10ms Duty ratio max 1/10

■Directivity

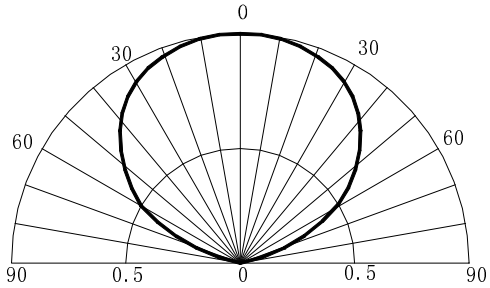

■Electrical -Optical Characteristics (Ta=25℃)

Item	Symbol	Condition	Min.	Typ.	Max.	Unit
DC Forward Voltage	V_F	I_F=20mA	1.8	2.0	2.4	V
DC Reverse Current	I_R	V_R=5V	-	-	10	μA
Domi. Wavelength	λ_D	I_F=20mA	585	590	595	nm
Luminous Intensity	Iv	I_F=20mA	1120	1560	2180	mcd
50% Power Angle	$2\theta_{1/2}$	I_F=20mA	-	120	-	deg

TÜV CERT ISO 9001 : 2000
RWTÜV Certified Company
www.optosupply.com RoHS Compliant EU 2002/95/EC
ATTENTION
OBSERVE PRECAUTIONS
ELECTROSTATIC
SENSITIVE DEVICES