Specifications		2S4P ICR18650-26H
Nominal voltage [V]		7,2
Typical capacity [mAh]		10400
Charging method		CC/CV
Charging voltage [V]		8,4
Size [mm]		According to the draw
Weight [g]		430
Typical charge [mA]		5200
Maximum continuous discharge current/Max. [mA]		6000
Discharge cut-off voltage		5
Charge temperature	Typical	0°C do 45°C
	Rapid	10°C do 45°C
Discharge temperature	Continous	20°C do 60°C
Storage temperature	Recommended	20°C do 35°C

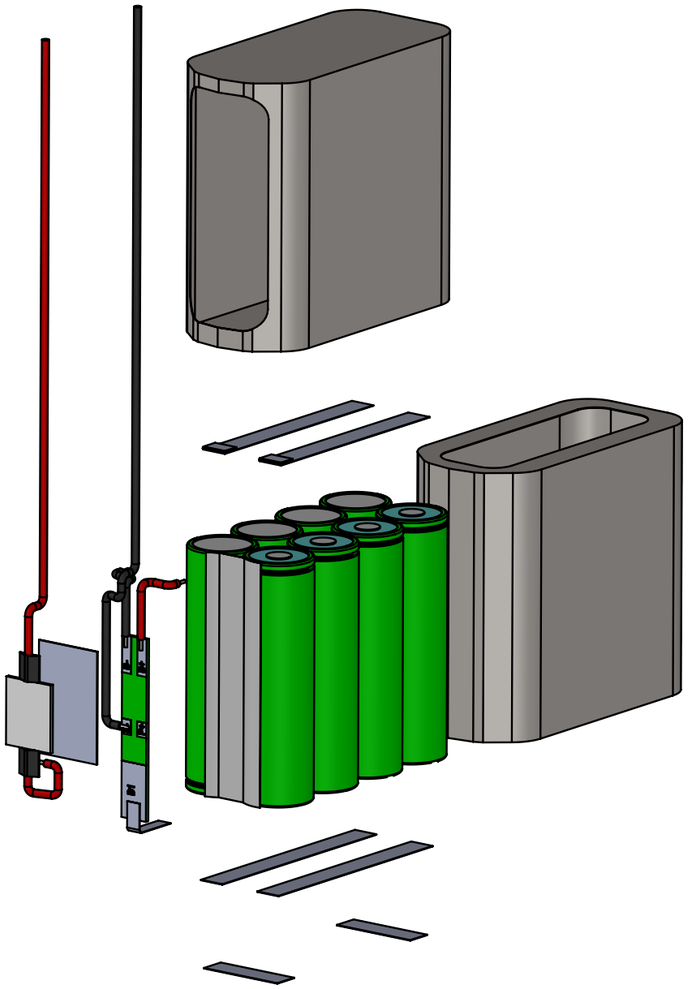

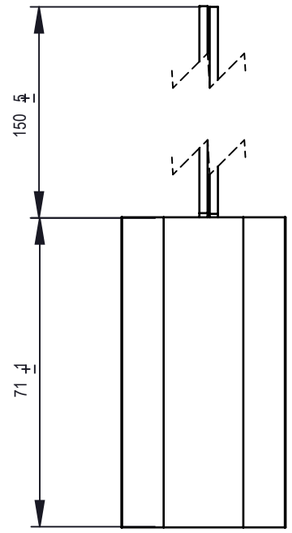

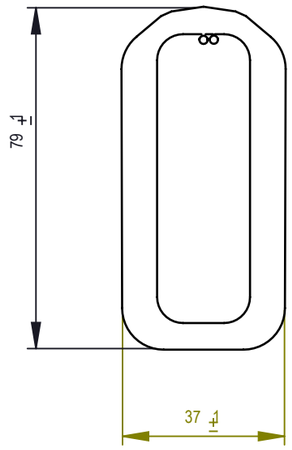

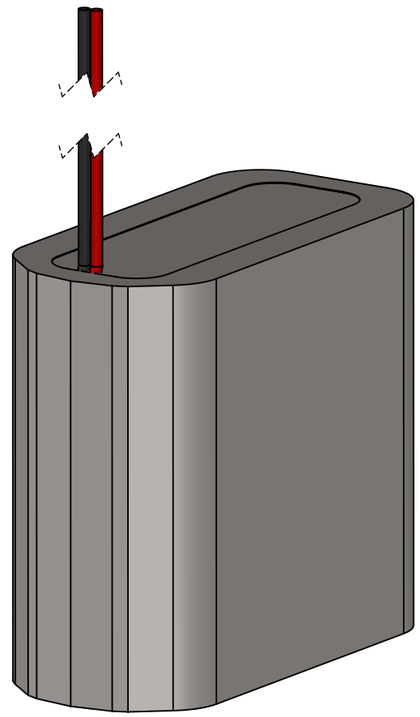

Scale 1:1

Caution: The following electrical parameters relating to the working of battery pack at 25 C.

		1:2`			1
					B
	2015-08-10	Date of implementation/ 2014-01-21	Battery pack 2S4P		