Specifications		2S1P ICR18650-26H
Nominal voltage [V]		7,2
Typical capacity [mAh]		2600
Charging method		CC/CV
Charging voltage [V]		8,4
Size [mm]		According to the draw
Weight [g]		130
Typical charge [mA]		1300
Maximum continuous discharge current/Max. [mA]		3000
Discharge cut-off voltage		5
Charge temperature	Typical	0°C do 45°C
	Rapid	10°C do 45°C
Discharge temperature	Continous	20°C do 60°C
Storage temperature	Recommended	20°C do 35°C

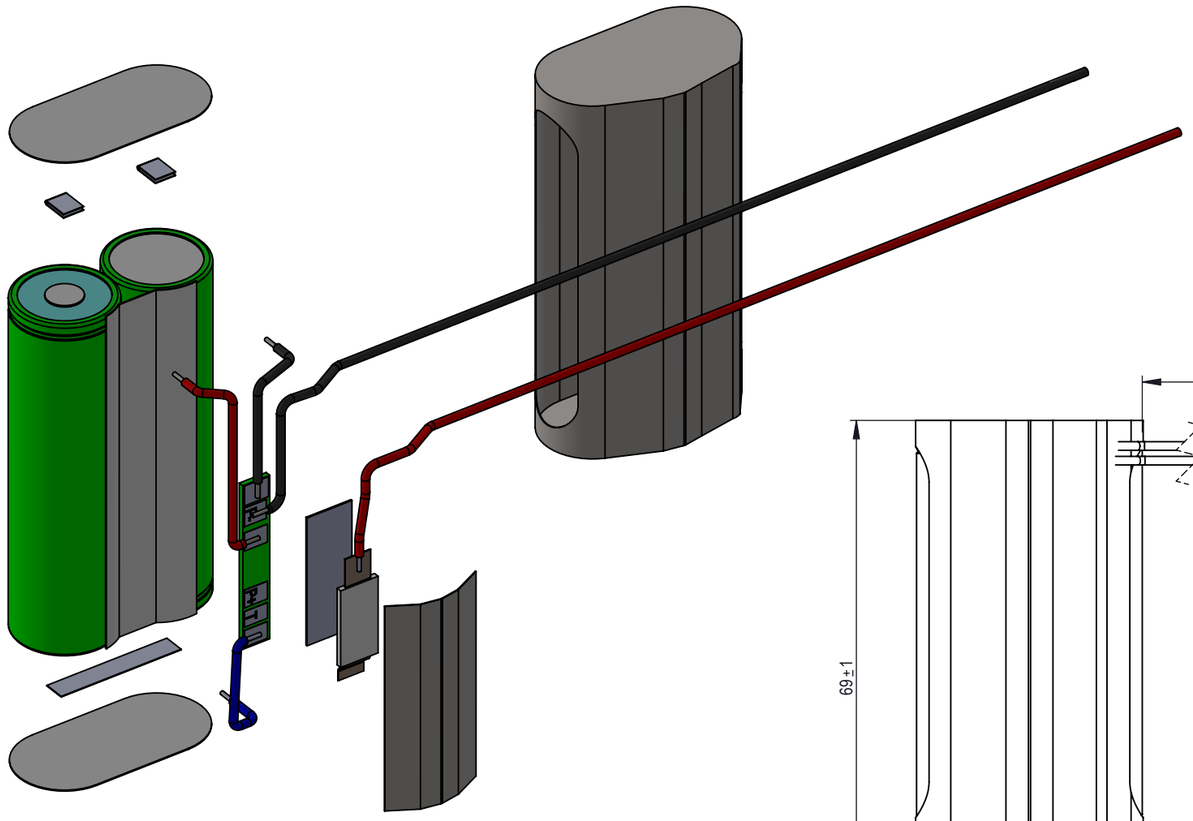

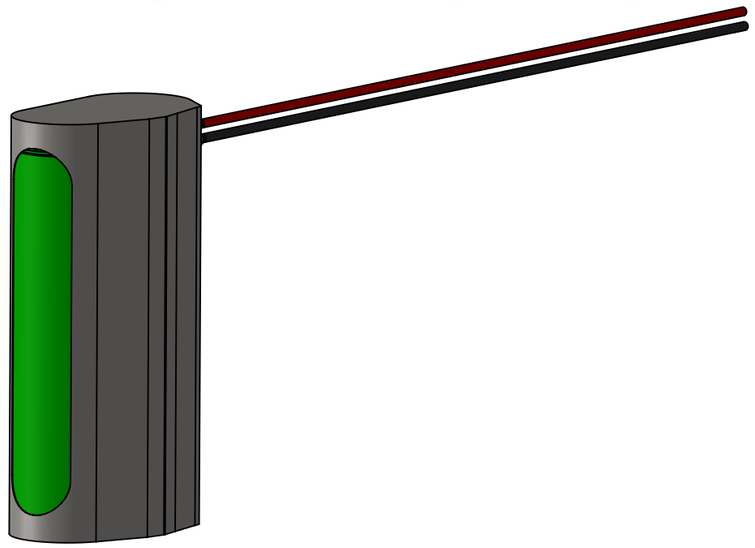

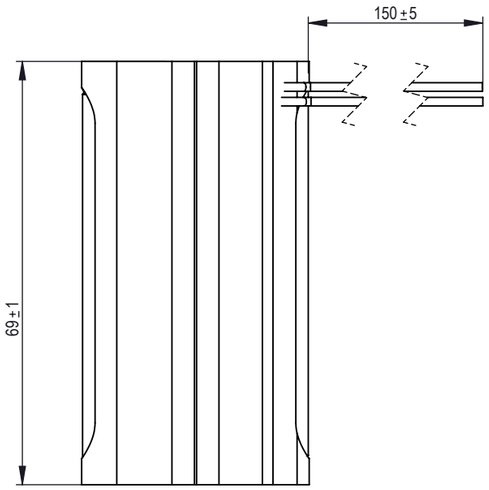

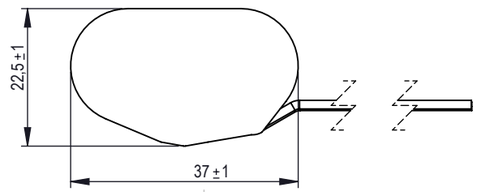

Index WT:

Update:	Date of implementation/	Product reference/ Nazwa:	Docum. number:
2015-08-10	2014-01-16	Battery pack 2S1P	1130.00.00

S:\SZWAL TECHNICZNY\SZ PROJEKTOWANIA\PUBLICZNY\PROJEKTY DPP 1000\1130.00.00 1A\DOKUMENTACJA\PROJEKTOWANIE\MECHANIKA\