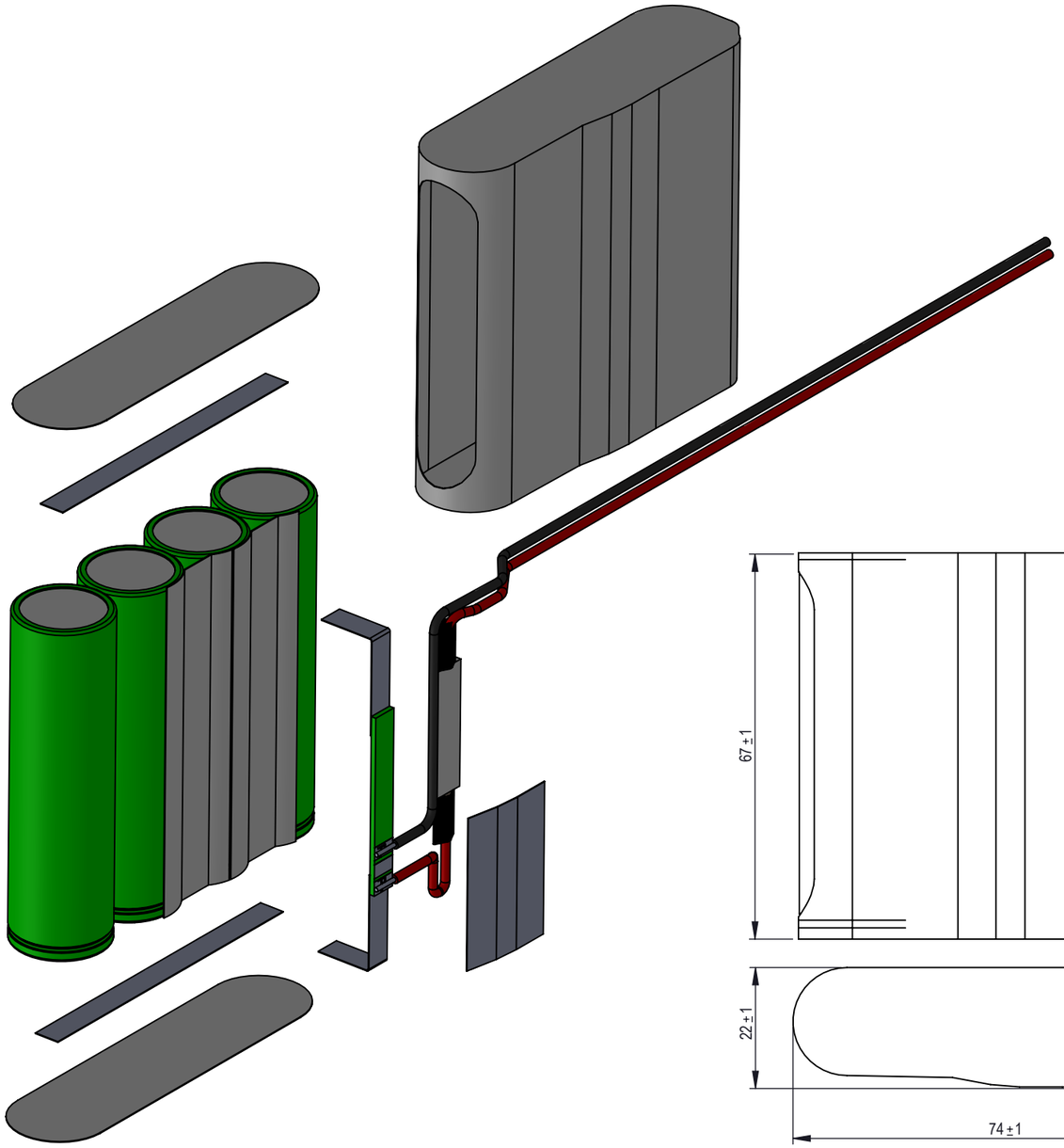

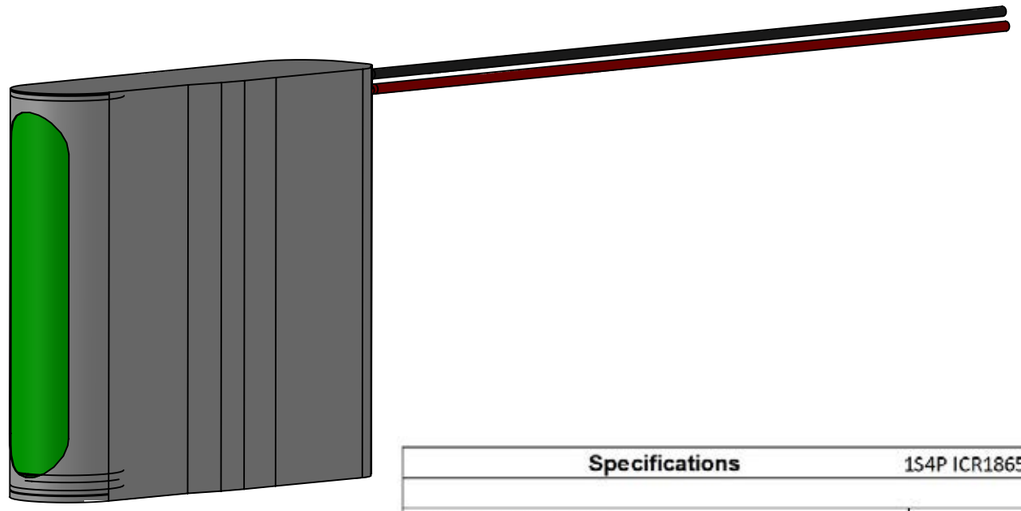

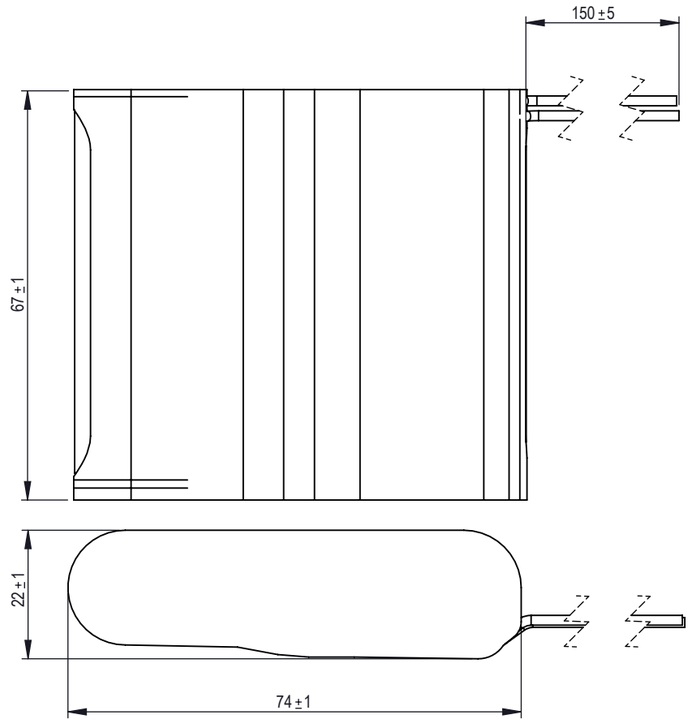

Specifications		1S4P ICR18650-26H
Nominal voltage [V]		3,6
Typical capacity.[mAh]		10400
Charging method		CC/CV
Charging voltage.[V]		4,2
Size [mm]		According to the draw
Weight [g]		230
Typical charge/ Ładowanie standardowe [mA]		5000
Maximum continuous discharge current/Max. [mA]		5000
Discharge cut-off voltage.		2,5
Charge temperature	Typical	0°C do 45°C
	Rapid	10°C do 45°C
Discharge temperature.	Continous	20°C do 60°C
Storage temperature	Recommended.	20°C do 35°C

B

	Date of implementation/	Product reference:	Docum. number/ Nr rysunku:
2015-08-10	2014-01-16	Battery pack 1S4P	1129.00.00

S:\DZIAŁ TECHNICZNY\DZ PROJEKTOWANIA\PUBLICZNY\PROJEKTY DPP 1000\1129.00.00.1\ADDKUMENTACJA\PROJEKTOWANIE\MECHANIKA\